techhose
QUALITY CONNECTIONS

Hydraulics	Pneumatics & Vacuum	Industrial	Compressed Air & Ring Main	Process & Instrumentation

Pneumatics

Metal Work

2022 - 2024 Catalogue

www.tech-hose.co.uk

SECTION 2

Metal Work

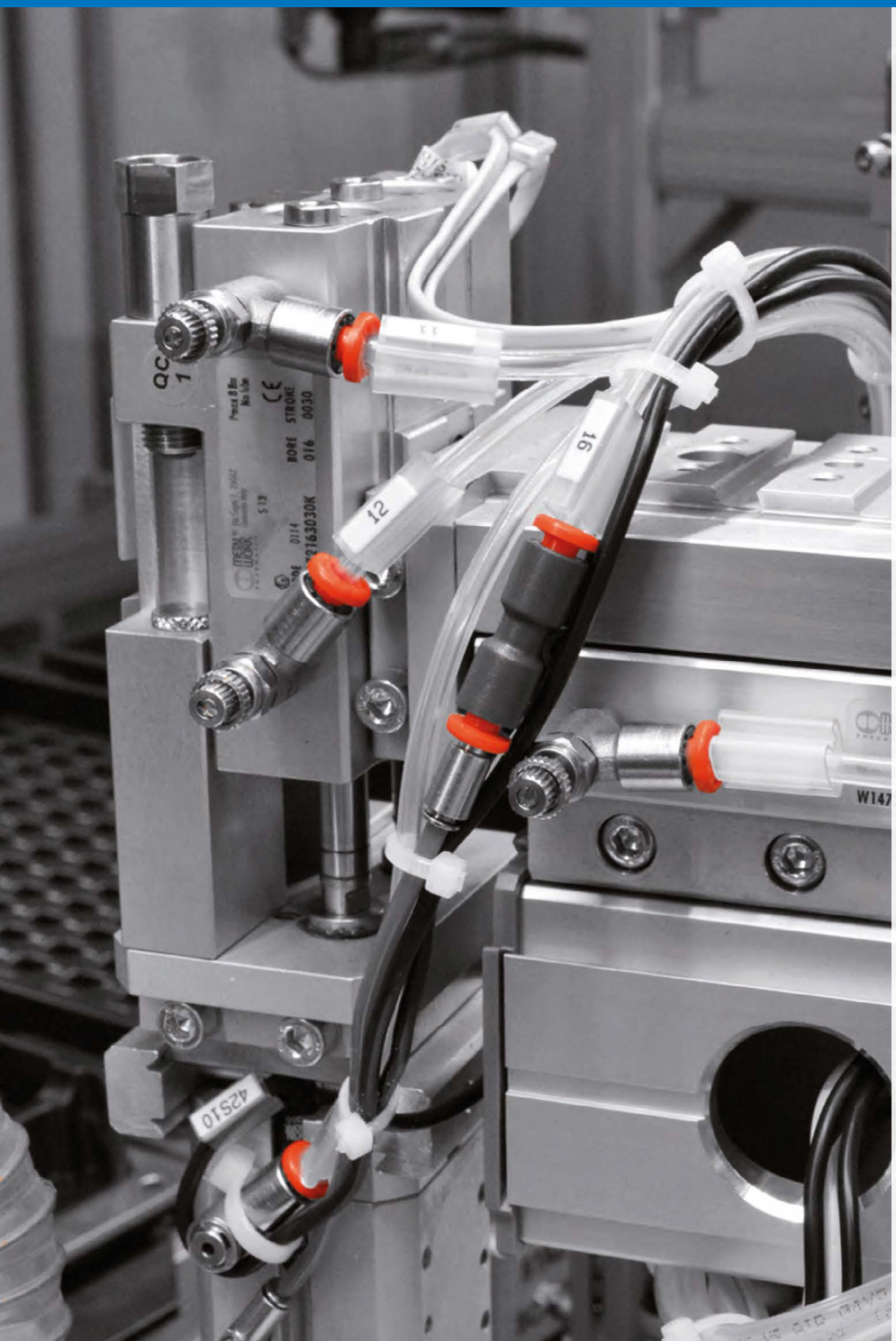

- Cylinders
- Cylinder Accessories
- Flow Regulators
- Block Fittings
- Flow Control Valves
- Function Fittings
- Pressure Boosters
- Mechanical Valves
- Hand Valves
- Pneumatically Operated Valves
- Solenoid Control Valves
- ISO Valves
- Solenoid Coils
- Multimach Valve System
- EB 80 Electro Pneumatic System
- Special Purpose Valves
- Pressure & Vacuum Switches
- Filters
- Regulators
- Lubricators

SECTION 2 CONTENTS

A-Z

Block Fittings	76
Breathe Air Set	144
Cartridge Cylinders	49
Cylinder Guide Units	65-66
EB 80 Electro Pneumatic System	110-118
Filter Regulator for Water	125-126
Flow Control Valves	77
Flow Regulators	73-75
FRL's SKILLAIR	145-149
FRL's, ONE Air Treatment Unit	150
Functional Fittings, Line on Line	78-81
Hand Valves	89-91
ISO 15552 All Stainless Steel Cylinders	69-72
ISO 15552 High Corrosion Resistance Cylinders	55-56
ISO 15552 Standard Cylinders	52-59
ISO 21287 Compact Cylinders	63-64
ISO 6432 All Stainless Steel Cylinders	67-68
ISO 6432 Mini Cylinders	50-51
ISO Valves	103-106
Mechanical Valves	85-88
Mechanical Valves, Miniature	83-84
Miniature FRL's, BIT	122-124
Multimach Valve System	108-109
Pneumatic Logic Valves	107
Pneumatically Operated Valves	92-95
Pressure Boosters	82
Quick Exhaust Valves	77
Round RNDC Cylinders	60-62
Solenoid Control Valves	96-102
Special Purpose Valves	119-121
Standard Series FRL's, SYNTESI	128-137
Standard Series FRL's, NEW DEAL	138-144

CARTRIDGE CYLINDERS

M5 Threaded Inlet Port

- Front spring
- Non-magnetic
- With threaded or non-threaded piston rod

Material Specification

- Nickel-plated brass barrel
- Stainless steel piston rod
- Zinc coated steel nuts
- Polyurethane seals
- Steel spring

Working Temperature:
Max +60°C

Maximum Working Pressure:
350 bar

Dimensions

Bore	A	B	C	D		ØE	F	H	M	ch	G		
				Threaded Piston Rod	Non-threaded Piston Rod						Cylinder Stroke		
											5	10	15
6	M10 x 1	8.5	M5	M3	Ø3	9	5	8	3	14	19.5	25.5	32.5
10	M15 x 1.5	13	M5	M4	Ø5	14	5	11.5	4	19	20.5	27	34
16	M22 x 1.5	19	M5	M5	Ø5	20	6	14	5	27	23.5	29.5	36

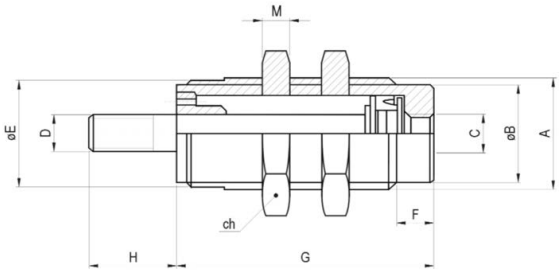

Single Acting Cylinders with Threaded Rod

9250	Bore mm	Stroke mm
W1000060005	6	5
W1000060010	6	10
W1000060015	6	15
W1000100005	10	5
W1000100010	10	10
W1000100015	10	15
W1000160005	16	5
W1000160010	16	10
W1000160015	16	15

ISO 6432 MINI CYLINDERS

ISO 6432 Single Acting Cylinders

Technical Data for all ISO 6432 Cylinders

- Maximum operating pressure: 10 bar
- Temperature range: -10ºC to +80ºC
- Fluid: lubricated or unlubricated air
- Inrush pressure: Ø10-12 = 0.8 bar, Ø16-25 = 0.6 bar
- Forces generated at 6 bar thrust/retraction: Ø16: 108N/95N, Ø20: 169N/148N, Ø25: 265N/228N

Dimensions

Ø	AM	BE	ØCD	ØD	ØD1	G	EE	EW	L	L1	L2	L3	L4	L5	KK	XC	WF	KW	KV	MR	NA	NB	SW	CH	K
10	12	M12 x 1.25	4	17	4	6	M5	8	6	86	10	12	10	46	M4	64	16	7	19	12	15	15	7	3	3
12	16	M16 x 1.5	6	19	6	6	M5	12	9	104	13	17	10	49	M6	75	22	8	24	16	17	17	10	5	3
16	16	M16 x 1.5	6	23	6	6	M5	12	9	111	13	17	10	56	M6	82	22	8	24	16	20	20	10	5	3.5
20	20	M22 x 1.5	8	34	8	8	G1/8	16	12	129	14	17	15	68	M8	95	24	10	32	18	28	28	13	7	4.6
25	22	M22 x 1.5	8	34	10	9	G1/8	16	12	143	17	20	18	73	M10 x 1.25	104	28	10	32	21	30	30	17	8	5

Non-magnetic

9146	Diameter mm	Stroke mm
1110100010XN	10	10
1110100025XN	10	25
1110100050XN	10	50
1110120010CN	12	10
1110120025CN	12	25
1110120050CN	12	50
1110160010CN	16	10
1110160025CN	16	25
1110160050CN	16	50
1110200010CN	20	10
1110200025CN	20	25
1110200050CN	20	50
1110250010CN	25	10
1110250025CN	25	25
1110250050CN	25	50

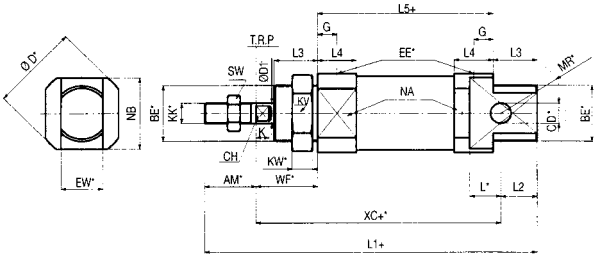

ISO 6432 Double Acting Cylinders

Magnetic

9146	Diameter mm	Stroke mm
1120160010CN	16	10
1120160025CN	16	25
1120160050CN	16	50
1120160080CN	16	80
1120160100CN	16	100
1120160125CN	16	125
1120160160CN	16	160
1120160200CN	16	200
1120200010CN	20	10
1120200025CN	20	25
1120200050CN	20	50
1120200080CN	20	80
1120200100CN	20	100
1120200125CN	20	125
1120200160CN	20	160
1120200200CN	20	200
1120200250CN	20	250
1120250010CN	25	10
1120250025CN	25	25
1120250050CN	25	50
1120250080CN	25	80
1120250100CN	25	100
1120250125CN	25	125
1120250160CN	25	160
1120250200CN	25	200
1120250250CN	25	250
1120250320CN	25	320

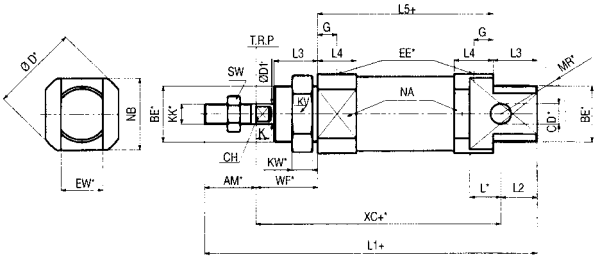

ISO 6432 MINI CYLINDERS ACCESSORIES

Foot Mounting

To suit ISO 6432 Cylinders

9146	To Suit
W0950080001	10
W0950120001	12-16
W0950200001	20-25

Flange Mounting

To suit ISO 6432 Cylinders

9146	To Suit
W0950080002	10
W0950120002	12-16
W0950200002	20-25

Counter Support

To suit ISO 6432 Cylinders

9146	To Suit
W0950080005	10
W0950120005	12-16
W0950200005	20-25

Cylinder Head Nut

To suit ISO 6432 Cylinders

9146	To Suit	Thread
W0950080010	10	M12 x 1.25
W0950120010	16	M16 x 1.5
W0950200010	25	M22 x 1.5

Piston Rod Nut

To suit ISO 6432 Cylinders

9146	To Suit	Thread
W0950080011	10	M4
W0950120011	16	M6
W0950200011	20	M8
W0950322010	25	M10 x 1.25

Fork Clevis

To suit ISO 6432 Cylinders

9146	To Suit	Thread
W0950080020	10	M4
W0950120020	12-16	M6
W0950200020	20	M8
W0950322020	25	M10 x 1.25

Spherical Rod Eye

To suit ISO 6432 Cylinders

9146	To Suit	Thread
W0950080025	10	M4
W0950120025	12-16	M6
W0950200025	20	M8
W0950322025	25	M10 x 1.25

Reed Switch & Bracket

To suit ISO 6432 Cylinders

9146	Description/To Suit
W0950000201	Reed Switch
W0950000510	10
W0950000512	12
W0950000516	16
W0950000520	20
W0950000525	25

ISO 15552 CYLINDERS (FORMERLY ISO 6431)

Double Acting Cylinders

Technical Data for ISO 15552 Cylinders
- Fluid: unlubricated air (lubrication, if used, must be continuous)
- Sensor magnet: all versions come complete with magnet
- Piston rod material: C40 chromed steel Ø32-63
- Piston seal: NBR

Temperature Range:
10°C to +70°C

Maximum Operating Pressure:
10 bar

Dimensions

Ø	A	A1	A2	B	C	C1	CH	CH1	D	D1	D2	E	E1	F	G	G1	H	Ø	L	L0	L1	L2	M	N	P	Q
32	10	7	10	30	26	16	10	6	M10 x 1.25	12	15	32.5	5	22	G1/8	M6	47	32	120	94	74	146	9	4.5	6	4
40	12	9	10	35	30	20	13	6	M12 x 1.25	16	19	38	5	24	G1/4	M6	53	40	135	105	81	165	9	4.5	6	4
50	14	14	10	40	37	25	17	8	M16 x 1.5	20	19	46.5	5	32	G1/4	M8	65	50	143	106	78	180	12	5.5	6	6
63	16	14	10	45	37	25	17	8	M16 x 1.5	20	23	56.5	5	32	G3/8	M8	75	63	158	121	89	195	12	5.5	6	6
80	18	12	12	45	46	33	22	10	M20 x 1.5	25	23	72	8	40	G3/8	M10	95	80	174	128	92	220	16	5.5	10	7
100	20	14	12	55	51	38	22	10	M20 x 1.5	25	27	89	8	40	G1/2	M10	115	100	189	138	98	240	16	5.5	10	7
125	25	21	10	60	65	45	27	12	M27 x 2	32	27	110	8	54	G1/2	M12	140	125	225	160	110	290	19	6.5	12	8

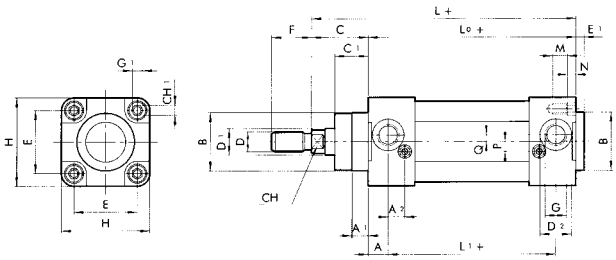

Magnetic & Cushioned

9195	Diameter (mm)	Stroke (mm)
1213320025CN	32	25
1213320050CN	32	50
1213320080CN	32	80
1213320100CN	32	100
1213320125CN	32	125
1213320160CN	32	160
1213320200CN	32	200
1213320250CN	32	250
1213320320CN	32	320
1213320400CN	32	400
1213320500CN	32	500
1213400025CN	40	25
1213400050CN	40	50
1213400080CN	40	80
1213400100CN	40	100
1213400125CN	40	125
1213400160CN	40	160

9195	Diameter (mm)	Stroke (mm)
1213400200CN	40	200
1213400250CN	40	250
1213400320CN	40	320
1213400400CN	40	400
1213400500CN	40	500
1213500025CN	50	25
1213500050CN	50	50
1213500080CN	50	80
1213500100CN	50	100
1213500125CN	50	125
1213500160CN	50	160
1213500200CN	50	200
1213500250CN	50	250
1213500320CN	50	320
1213500400CN	50	400
1213500500CN	50	500

ISO 15552 CYLINDERS (FORMERLY ISO 6431)

Double Acting Cylinders

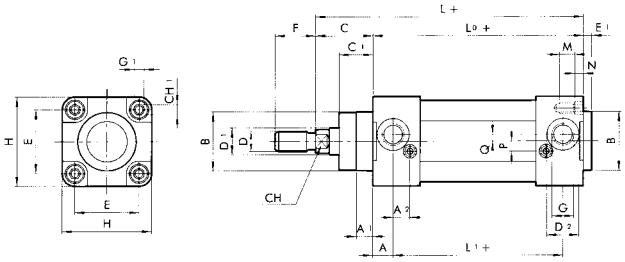

Magnetic & Cushioned

9195	Diameter (mm)	Stroke (mm)
1213630025CN	63	25
1213630050CN	63	50
1213630080CN	63	80
1213630100CN	63	100
1213630125CN	63	125
1213630160CN	63	160
1213630200CN	63	200
1213630250CN	63	250
1213630320CN	63	320
1213630400CN	63	400
1213630500CN	63	500
1213800025AN	80	25
1213800050AN	80	50
1213800080AN	80	80
1213800100AN	80	100
1213800125AN	80	125
1213800160AN	80	160
1213800200AN	80	200
1213800250AN	80	250
1213800320AN	80	320
1213800400AN	80	400

9195	Diameter (mm)	Stroke (mm)
1213800500AN	80	500
1213A10025AN	100	25
1213A10050AN	100	50
1213A10080AN	100	80
1213A10100AN	100	100
1213A10125AN	100	125
1213A10160AN	100	160
1213A10200AN	100	200
1213A10250AN	100	250
1213A10320AN	100	320
1213A10400AN	100	400
1213A10500AN	100	500
1213A20100AN	125	100
1213A20125AN	125	125
1213A20160AN	125	160
1213A20200AN	125	200
1213A20250AN	125	250
1213A20320AN	125	320
1213A20400AN	125	400
1213A20500AN	125	500

ISO 15552 CYLINDERS (FORMERLY ISO 6431)

Double Acting Cylinders

Technical Data for ISO 15552 Cylinders Ø 160-320
- Design: round barrel with tie rods
- Sensor magnet: all versions come complete with magnet
- Piston rod material: C45 steel, chromed
- Piston seal: NBR
- Options: available with mounted intermediate hinge

Temperature Range:
10°C to +80°C

Maximum Operating Pressure:
10 bar

More Sizes Available
Up to 320mm diameter & 2600mm stroke

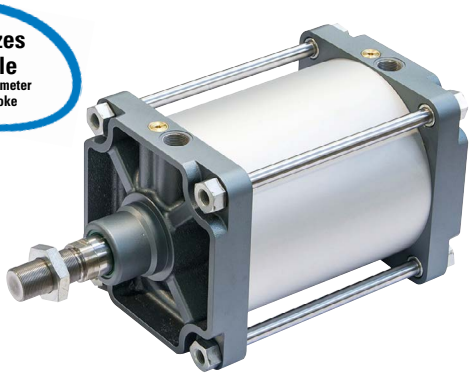

Magnetic & Cushioned

9195	Diameter mm	Stroke mm
W1211600025	160	25
W1211600050	160	50
W1211600080	160	80
W1211600100	160	100
W1211600125	160	125
W1211600160	160	160
W1211600200	160	200
W1211600250	160	250
W1211600320	160	320
W1211600400	160	400
W1211600500	160	500
W1212000025	200	25
W1212000050	200	50
W1212000080	200	80
W1212000100	200	100
W1212000125	200	125
W1212000160	200	160
W1212000200	200	200
W1212000250	200	250
W1212000320	200	320
W1212000400	200	400
W1212000500	200	500

9195	Diameter mm	Stroke mm
W1212500025	250	25
W1212500050	250	50
W1212500080	250	80
W1212500100	250	100
W1212500125	250	125
W1212500160	250	160
W1212500200	250	200
W1212500250	250	250
W1212500320	250	320
W1212500400	250	400
W1212500500	250	500
W1213200025	320	25
W1213200050	320	50
W1213200080	320	80
W1213200100	320	100
W1213200125	320	125
W1213200160	320	160
W1213200200	320	200
W1213200250	320	250
W1213200320	320	320
W1213200400	320	400
W1213200500	320	500

For dimensions and further technical information refer to sales team.

ISO 15552 CYLINDERS, SERIES HCR (HIGH CORROSION RESISTANCE)

In some applications, cylinders are exposed to aggressive environments (e.g. the dairy, fruit and vegetable, and food industry) or to substances and washings with aggressive detergents (e.g. caustic soda, hydrochloric acid and lactic acid). Under these conditions, the HCR series cylinders ensure better corrosion resistance.

Cylinders made to ISO 15552, designed and built with materials and/or surface treatments that are highly resistant to corrosion

They come in various versions and with specific range of accessories:
- with or without magnet
- with single or through piston rod

Also available with liner in the STD series or series 3

1.	Piston rod: AISI 316, thickness chromed
2.	Head: anodised pressure die-cast aluminium, epoxy-vinyl ester and epoxy-resin powder coating
3.	Piston rod gasket: special polyurethane
4.	Guide bushing: steel strip with bronze and PTFE insert
5.	Barrel: drawn anodised calibrated aluminium
6.	Semi-piston: made of self-lubricating technopolymer with built-in cushioning olives (aluminium with technopolymer shoe for Ø 80, 10 and 125)
7.	Piston gasket: NBR
8.	Magnet: plastoferrite
9.	Buffer + static O-rings: NBR
10.	Cushioning gasket: NBR
11.	Needle: AISI 316, screws: AISI 316
12.	Screws: AISI 316

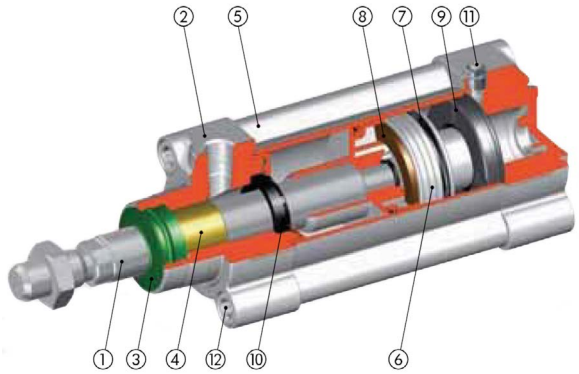

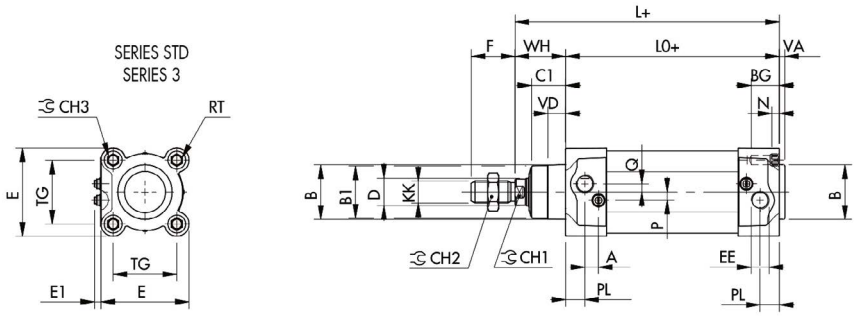

Ø	PL	VD	A	B	B1	WH	C1	CH1	CH2	CH3	KK	D	TG	VA	F	EE	RT	E	E1 min	E1 max	L	LO	ZM	BG	N	P	Q
32	10	6.5	10	30	28	26	16	10	17	6	M10 x 1.25	12	32.5	4	22	G1/8	M6	46	5.5	8.4	120	94	146	14.5	4.5	6	4
40	12	8	10	35	33	30	20	13	19	6	M12 x 1.25	16	38	4	24	G1/4	M6	54	4.5	8.4	135	105	165	14.5	4.5	6	4
50	14	13	10	40	38	37	25	17	24	8	M16 x 1.5	20	46.5	4	32	G1/4	M8	64.5	4.5	8.9	143	106	180	17.5	5.5	6	6
63	16	14	10	45	40	37	25	17	24	8	M16 x 1.5	20	56.5	4	32	G3/8	M8	75.5	4.1	9.5	158	121	195	17.5	5.5	6	6
80	18	12	12	45	43	46	33	22	30	10	M20 x 1.5	25	72	4	40	G3/8	M10	94	6.2	12.2	174	128	220	21.5	5.5	10	7
100	20	14	12	55	49	51	38	22	30	10	M20 x 1.5	25	89	4	40	G1/2	M10	111	6.7	12.2	189	138	240	21.5	5.5	10	7
125	25	20	10	60	54	65	45	27	41	12	M27 x 2	32	110	6	54	G1/2	M12	135	5.7	12.7	225	160	290	25.5	6.5	12	8

ISO 15552 CYLINDERS, SERIES HCR (HIGH CORROSION RESISTANCE)

ISO 15552 HCR Double Acting Cylinders

Magnetic & Cushioned

9195	Diameter mm	Stroke mm
1213320025BL	32	25
1213320050BL	32	50
1213320080BL	32	80
1213320100BL	32	100
1213320125BL	32	125
1213320160BL	32	160
1213320200BL	32	200
1213320250BL	32	250
1213320320BL	32	320
1213320400BL	32	400
1213320500BL	32	500
1213400025BL	40	25
1213400050BL	40	50
1213400080BL	40	80
1213400100BL	40	100
1213400125BL	40	125
1213400160BL	40	160
1213400200BL	40	200
1213400250BL	40	250
1213400320BL	40	320
1213400400BL	40	400
1213400500BL	40	500
1213500025BL	50	25
1213500050BL	50	50
1213500080BL	50	80
1213500100BL	50	100
1213500125BL	50	125
1213500160BL	50	160
1213500200BL	50	200
1213500250BL	50	250
1213500320BL	50	320
1213500400BL	50	400
1213500500BL	50	500
1213630025BL	63	25
1213630050BL	63	50
1213630080BL	63	80
1213630100BL	63	100

9195	Diameter mm	Stroke mm
1213630125BL	63	125
1213630160BL	63	160
1213630200BL	63	200
1213630250BL	63	250
1213630320BL	63	320
1213630400BL	63	400
1213630500BL	63	500
1213800025WL	80	25
1213800050WL	80	50
1213800080WL	80	80
1213800100WL	80	100
1213800125WL	80	125
1213800160WL	80	160
1213800200WL	80	200
1213800250WL	80	250
1213800320WL	80	320
1213800400WL	80	400
1213800500WL	80	500
1213A10025WL	100	25
1213A10050WL	100	50
1213A10080WL	100	80
1213A10100WL	100	100
1213A10125WL	100	125
1213A10160WL	100	160
1213A10200WL	100	200
1213A10250WL	100	250
1213A10320WL	100	320
1213A10400WL	100	400
1213A10500WL	100	500
1213A20100WL	125	100
1213A20125WL	125	125
1213A20160WL	125	160
1213A20200WL	125	200
1213A20250WL	125	250
1213A20320WL	125	320
1213A20400WL	125	400
1213A20500WL	125	500

ISO 15552 CYLINDERS ACCESSORIES (FORMERLY ISO 6431)

Foot Mounting

To suit ISO 15552 Cylinders

9146	Ø	AB	AH	AO	AT	AU	TR	UH	H1	H2
W0950322001	32	7	32	35	4	24	32	45	144	142
W0950402001	40	9	36	43	4	28	36	52	163	161
W0950502001	50	9	45	47	4	32	45	65	175	170
W0950632001	63	9	50	47	6	32	50	75	190	185
W0950802001	80	12	63	61	6	41	63	95	215	210
W0951002001	100	14	71	66	6	41	75	115	230	220
W0951252001	125	16	90	60	7	45	90	140	270	250
W0951602001	160	18	115	80	10	60	115	180	319	300
W0952002001	200	22	135	100	10	70	135	220	345	320

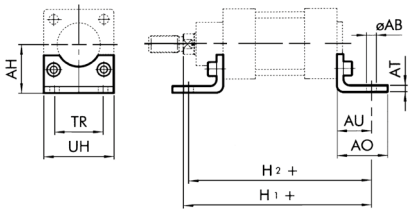

Female Hinge

To suit ISO 15552 Cylinders

9146	Ø	B	D	E	ØG	H3	R	S
W0950322003	32	45	26	22	10	142	11	10
W0950402003	40	52	28	25	12	160	13	10
W0950502003	50	60	32	27	12	170	13	12
W0950632003	63	70	40	32	16	190	17	12
W0950802003	80	90	50	36	16	210	17	16
W0951002003	100	110	60	41	20	230	21	16
W0951252003	125	130	70	50	25	275	26	20
W0951602003	160	170	90	55	30	314	25	20
W0952002003	200	170	90	60	30	335	25	25

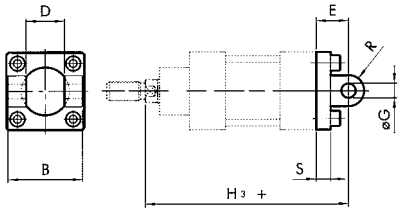

Male Hinge

To suit ISO 15552 Cylinders

9146	Ø	D	E	F	ØG	H	H2
W0950322004	32	26	22	11	10	10	142
W0950402004	40	28	25	13	12	10	160
W0950502004	50	32	27	13	12	12	170
W0950632004	63	40	32	17	16	12	190
W0950802004	80	50	36	17	16	16	210
W0951002004	100	60	41	21	20	16	230
W0951252004	125	70	50	26	25	20	1590
W0951602004	160	90	55	25	30	20	314
W0952002004	200	90	60	25	30	25	335

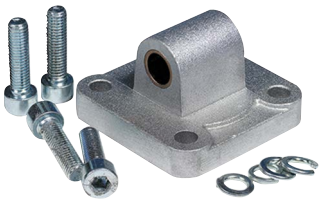

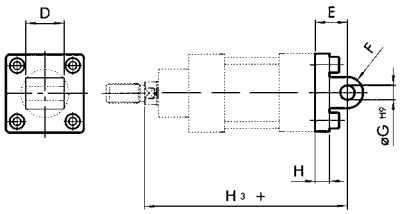

ISO 15552 CYLINDERS ACCESSORIES (FORMERLY ISO 6431)

Male 90° Hinge

To suit ISO 15552 Cylinders

9146	Ø	B	C	D	E	G	L	M	N
W0950322108	32	25.5	25	45	7	32	10	10	10
W0950402108	40	27.5	32	52	7	36	10	12	12
W0950502108	50	31.5	32	65	9	45	12	12	12
W0950632108	63	39.5	40	75	9	50	16	16	15
W0950802108	80	49.5	40	95	11	63	16	16	15
W0951002108	100	59.5	50	115	11	21	20	20	22
W0951252008	125	70	50	25	14	90	16	25	22

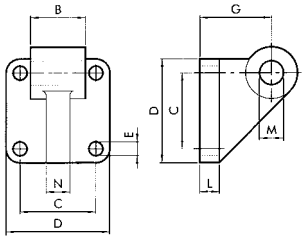

Flange Mounting

To suit ISO 15552 Cylinders

9146	Ø	B	B1	B2	B3	B4	ØD4	T
W0950322002	32	64	80	50	10	32	7	16
W0950402002	40	72	90	55	10	36	9	20
W0950502002	50	90	110	65	12	45	9	25
W0950632002	63	100	120	75	12	50	9	25
W0950802002	80	126	153	95	16	63	12	30
W0951002002	100	150	178	115	16	75	14	35
W0951252002	125	180	220	140	20	90	16	45
W0951602002	160	230	270	180	20	115	18	59
W0952002002	200	270	312	225	25	135	22	70

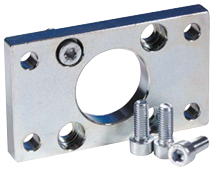

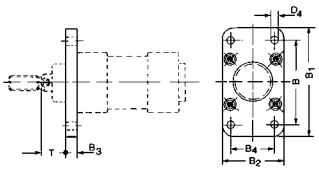

Piston Rod Nut

To suit ISO 15552 Cylinders

9146	Ø	D	H	SW
W0950322010	32	M10 x 1.25	6	17
W0950402010	40	M12 x 1.25	7	19
W0950502010	50-63	M16 x 1.5	8	24
W0950802010	80-100	M20 x 1.5	9	30
W0951252010	125	M27 x 2	12	74
W0951602010	160/200	M36 x 2	14	55

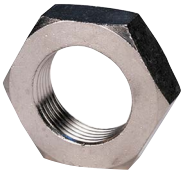

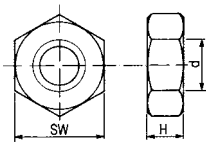

Fork Clevis

To suit ISO 15552 Cylinders

9146	Ø	M	A	B	C	L	F	D
W0950322020	32	10	20	10	20	52	40	M10 x 1.25
W0950402020	40	12	24	12	24	62	48	M12 x 1.25
W0950502020	50/63	16	32	16	32	83	64	M16 x 1.5
W0950802020	80/100	20	40	20	40	106	80	M20 x 1.5
W0951252020	125	30	55	30	55	148	110	M27 x 2
W0951602008	160/200	90	63	154	18	140	20	30
W0951602020	160/200	35	70	35	72	188	144	M36 x 2

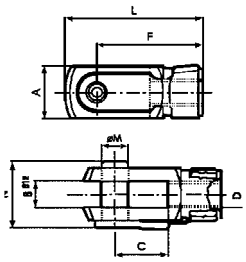

ISO 15552 CYLINDERS ACCESSORIES (FORMERLY ISO 6431)

Spherical Rod Eye

To suit ISO 15552 Cylinders

9146	Ø	M	B1	B	A	L	F	D	CH	ØG
W0950322025	32	10	10.5	14	28	57	43	M10 x 1.25	17	15
W0950402025	40	12	12	16	32	66	50	M12 x 1.25	19	17.5
W0950502025	50/63	16	15	21	42	85	64	M16 x 1.5	22	22
W0950802025	80/100	20	18	25	50	102	77	M20 x 1.5	30	27.5
W0951252025	125	30	25	37	70	145	110	M27 x 2	41	40
W0952002025	160/200	35	28	43	80	165	125	M36 x 2	58	46

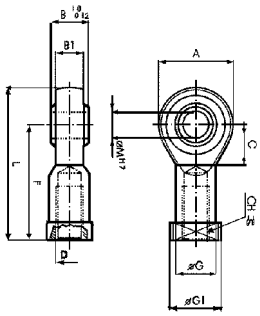

Reed Switch

Technical Data

Type		Contact
Maximum AC/DC voltage	V	Reed + varistor + LED 2 wires
		Reed + varistor + LED NO
		220 ISO cylinder
Maximum current at +25°C	mA	1,000
Power with inductive load	VA	15
Power with resistive load	Watt	50
Switch-on time	M sec	1.2
Switch-off time	M sec	0.1
Cable length		2.5m
Cable material		Soft PVC
Switch-on point	Gauss	110
Switch-off point	Gauss	95
Contact resistance		0.1

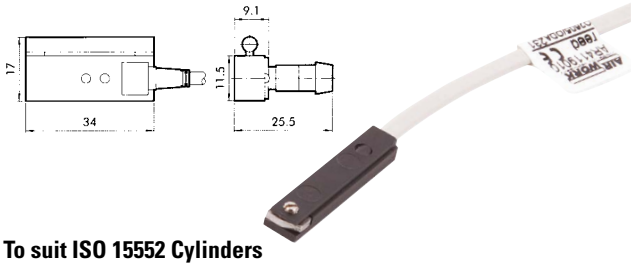

To suit ISO 15552 Cylinders

9146	Description
W0950000201	Reed Sensor ACC.DSM2-C525

Reed Switch Bracket

To suit ISO 15552 Cylinders

9146	Description	Cylinder Diameter
W0950000711	Bracket ACC. D.32 DST 80	32-40
W0950000712	Bracket ACC. D.50 DST 81	50-63
W0950000713	Bracket ACC. D.80-100-125 DST 82	80-125
0951602093	Bracket ACC. D.160-200	160-200

Seal Kits

Other variants available on request

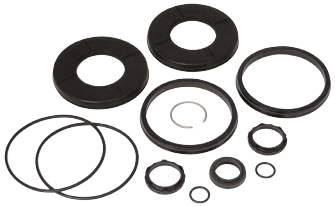

To suit ISO 15552 Cylinders

9146	Ø	Material
0090320502	32	NBR
0090400502	40	NBR
0090500502	50	NBR
0090630502	63	NBR
0090800502	80	NBR
0091000502	100	NBR
0091250502	125	NBR

Sensor Tester with M8 & M12 Connections

This sensor tester features the following:

- A green light and acoustic signal indicating correct operation
- Sensors can be checked without having to be disassembled
- M8 and M12 connections and terminal board for direct connection to the wires
- PNP or NPN switching button

Technical Data

- Container material: PA 6.6 blue
- Degree of protection: IP00
- Connections: M8 and M12 plug-socket type with 40cm cable
- Additional connections: three terminals for wire connection
- Power supply: 9V DC (battery type 6LR61)
- Internal voltage: 15V DC
- Green light: tester switched on
- Yellow light: sensor in operation
- Red light: battery flat

Automatic Switch Off

9146	Dimensions mm
W0950060000	63 x 88 x 24

ROUND RNDC CYLINDERS

Double Acting Cylinders

Clean profile cylinders available in different versions:

- Configuration with or without magnet
- Single and double acting
- Single or through-rod
- Pneumatic cushioning on request
- Range of gaskets available in NBR, polyurethane and FKM/FPM (for high temperatures)

Technical Specifications

- Fluid: unlubricated air (lubrication, if used, must be continuous)
- Sensor magnet: all versions come complete with magnet
- Piston rod material: C45 chrome rod, technolopolymer piston rod
- Piston seal: NBR

Temperature Range:
10°C to +80°C

Maximum Operating Pressure:
10 bar

Dimensions

Ø	D	E	F	ØG	CH1	I	L	M	N	O	Ø P	R	ØS	SW	T	CH2	V	W	L1
32	M30x1.5	M8x1	22	30	10	96	172	M10x1.25	14	G1/8	38	78	12	17	49	36	30	40	220
40	M38x1.5	M10x1	24	38	13	113	198	M12x1.25	16	G1/4	46	89	16	19	57	43	35	45	251
50	M45x1.5	M12x1.5	32	45	17	120	220	M16x1.5	18	G1/4	57	96	20	24	62	54	38	50	284

Components

1. Piston rod: C45 steel or stainless steel, thick chromed
2. Piston rod gasket: polyurethane, NBR or FKM/FPM
3. Guide bushing: steel strip with bronze and PTFE insert
4. Barrel: drawn anodised aluminium alloy
5. Half-piston: self-lubricating technopolymer with integrated cushioning olives
6. Magnet: plastoferrite
7. Piston gasket: polyurethane, NBR or FKM/FPM
8. Head: anodised aluminium alloy

Other variants available on request

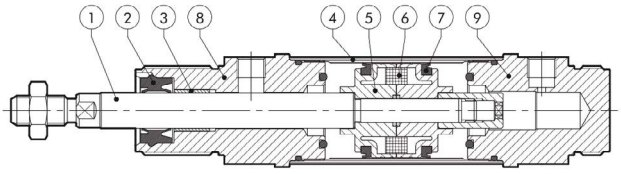

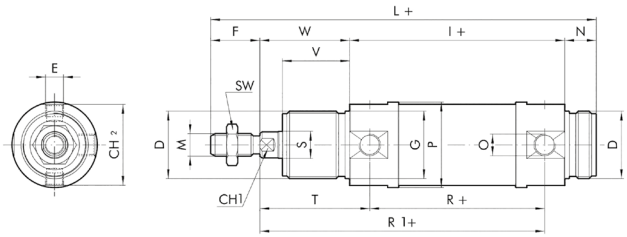

Magnetic & Cushioned

9195	Diameter mm	Stroke mm
1120320025CN	32	25
1120320050CN	32	50
1120320080CN	32	80
1120320100CN	32	100
1120320125CN	32	125
1120320160CN	32	160
1120320200CN	32	200
1120320250CN	32	250
1120400025CN	40	25
1120400050CN	40	50
1120400080CN	40	80
1120400100CN	40	100

9195	Diameter mm	Stroke mm
1120400125CN	40	125
1120400160CN	40	160
1120400200CN	40	200
1120400250CN	40	250
1120500025CN	50	25
1120500050CN	50	50
1120500080CN	50	80
1120500100CN	50	100
1120500125CN	50	125
1120500160CN	50	160
1120500200CN	50	200
1120500250CN	50	250

ROUND RNDC CYLINDER ACCESSORIES

Foot Mounting

To suit RNDC Cylinders

9146	Ø	A	B	C	D	E	F	G	H	I	L	M	N	O
W0950320002	32	124	50	7	4	14	52	7	14	28	150	66	49	28
W0950400002	40	153	60	10	5	20	60	9	18	30	178	80	58	33
W0950500002	50	160	64	10	6	20	70	9	20	40	190	90	70	40

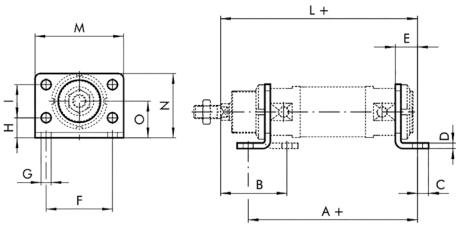

Counter Support

To suit RNDC Cylinders

9146	Ø	A	B	C	D	E	F	G	H	I	L	M	R	SW
W0950320005	32	40	35	24	4	7	8	12	46.1	20	127	60	12	13
W0950400005	40	50	40	30	5	9	10	13	57.5	28	146	74	13	17
W0950500005	50	54	45	34	6	9	10	14	69.1	36	158	89	14	19

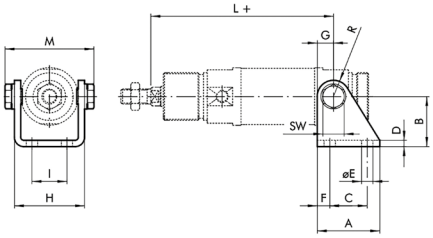

Head Lock Ring

To suit RNDC Cylinders

9146	Ø	A	B	C
W0950320010	32	M30 x 1.5	45	7
W0950400010	40	M38 x 1.5	50	8
W0950500010	50	M45 x 1.5	58	9

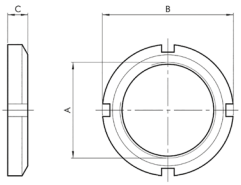

Fork Clevis

To suit RNDC Cylinders

9146	Ø	ØM	A	B	C	L	F	D	N
W0950322020	32	10	20	10	20	52	40	M10 x 1.25	26
W0950402020	40	12	24	12	24	62	48	M12 x 1.25	32
W0950502020	50/63	16	32	16	32	83	64	M16 x 1.5	40

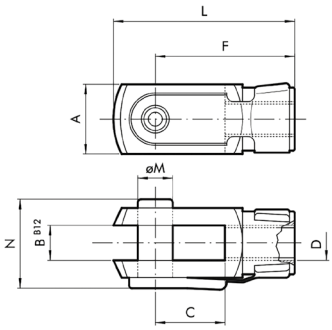

Spherical Rod Eye

To suit RNDC Cylinders

9146	Ø	ØM	C	B1	B	A	L	F	D	ØG	CH
W0950322025	32	10	15	10.5	14	28	57	43	M10 x 1.25	15	17
W0950402025	40	12	17	12	16	32	66	50	M12 x 1.25	17.5	19
W0950502025	50	16	22	15	21	42	85	64	M16 x 1.5	22	22

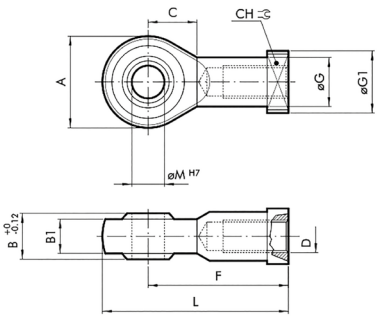

ROUND RNDC CYLINDER ACCESSORIES

Articulated Joint

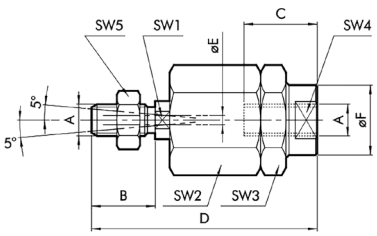

To suit RNDC Cylinders

9146	Ø	A	B	C	D	ØE	ØF	SW1	SW2	SW3	SW4	SW5
W0950322030	32	M10 x 1.25	20	20	71	4	22	12	30	30	19	17
W0950402030	40	M12 x 1.25	24	20	75	4	22	12	30	30	19	19
W0950502030	50	M16 x 1.5	32	32	103	4	32	20	41	41	30	24

Flexible Collar

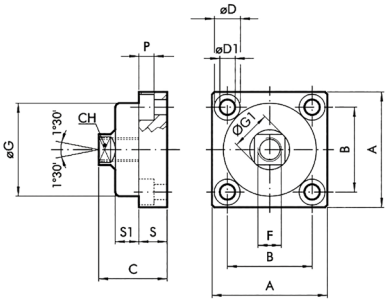

To suit RNDC Cylinders

9146	Ø	A	B	C	CH	ØD	ØD1	F	ØG	ØG1	P	S	S1
W0950326021	32	49	36	30	13	11	6.5	M10 x 1.25	39.5	17	6.5	12	10
W0950406021	40	59	42	36	15	14	8.5	M12 x 1.25	44	19	8.5	15	13.5
W0950506021	50	79	58	44	22	17	10.5	M16 x 1.5	59	26	10.5	20	15

Reed Switch & Bracket

Technical Data

Type		Contact
Maximum AC/DC voltage	V	Reed + varistor + LED 2 wires
		Reed + varistor + LED NO
		220 ISO cylinder
Maximum current at +25°C	mA	1,000
Power with inductive load	VA	15
Power with resistive load	Watt	50
Switch-on time	M sec	1.2

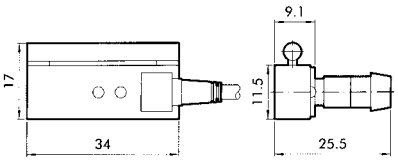

To suit ISO 6432 Cylinders

9146	Description
W0950000201	Reed Switch

Reed Switch & Bracket

Type		Contact
Switch-off time	M sec	0.1
Cable length		2.5m
Cable material		Soft PVC
Switch-on point	Gauss	110
Switch-off point	Gauss	95
Contact resistance		0.1

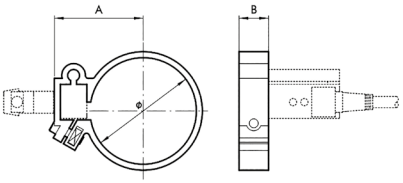

To suit RNDC Cylinders

9146	Description
W0950000132	Bracket for RNDC Ø32 Cylinder
W0950000140	Bracket for RNDC Ø40 Cylinder
W0950000150	Bracket for RNDC Ø50 Cylinder

ISO 21287 CYLINDERS

Compact Series Liner

Compact cylinder to ISO 21287, LINER series, available in different versions to meet all possible requirements. Below sizes listed are most popular, if you require an alternative size please contact the sales office.

The heads have been eliminated for ease of installation, improved sturdiness and precision. The metal lining is designed to withstand heavy-duty work, tensile stress and impact. Technopolymer parts can withstand dynamic and pneumatic thrust. The lining virtually acts as a "bearing" to which most of user accessories are attached. The wide range of anchors provide numerous fixing points. Retractable magnetic limit switches can be mounted to identify the position in the cylinder grooves.

Double Acting, Male Piston Rod

9146	Bore mm	Stroke mm
2800200005XP	20	5
2800200010XP	20	10
2800200015XP	20	15
2800200020XP	20	20
2800200025XP	20	25
2800200040XP	20	40
2800200050XP	20	50
2800250005XP	25	5
2800250010XP	25	10
2800250015XP	25	15
2800250020XP	25	20
2800250025XP	25	25
2800250040XP	25	40
2800250050XP	25	50
2800320005CP	32	5
2800320010CP	32	10
2800320015CP	32	15
2800320020CP	32	20
2800320025CP	32	25
2800320040CP	32	40
2800320050CP	32	50
2800400005CP	40	5
2800400010CP	40	10
2800400015CP	40	15
2800400020CP	40	20
2800400025CP	40	25
2800400040CP	40	40
2800400050CP	40	50

9146	Bore mm	Stroke mm
2800500005CP	50	5
2800500010CP	50	10
2800500015CP	50	15
2800500020CP	50	20
2800500025CP	50	25
2800500040CP	50	40
2800500050CP	50	50
2800630005CP	63	5
2800630010CP	63	10
2800630015CP	63	15
2800630020CP	63	20
2800630025CP	63	25
2800630040CP	63	40
2800630050CP	63	50
2800800005AP	80	5
2800800010AP	80	10
2800800015AP	80	15
2800800020AP	80	20
2800800025AP	80	25
2800800040AP	80	40
2800800050AP	80	50
2800100005AP	100	5
2800100010AP	100	10
2800100015AP	100	15
2800100020AP	100	20
2800100025AP	100	25
2800100040AP	100	40
2800100050AP	100	50

ISO 21287 CYLINDERS

Compact Series Liner

Compact cylinder to ISO 21287, LINER series, available in different versions to meet all possible requirements. Below sizes listed are most popular, if you require an alternative size please contact the sales office.

The heads have been eliminated for ease of installation, improved sturdiness and precision. The metal lining is designed to withstand heavy-duty work, tensile stress and impact. Technopolymer parts can withstand dynamic and pneumatic thrust. The lining virtually acts as a "bearing" to which most of user accessories are attached. The wide range of anchors provide numerous fixing points. Retractable magnetic limit switches can be mounted to identify the position in the cylinder grooves.

Double Acting, Female Piston Rod

9146	Bore mm	Stroke mm
2900200005XP	20	5
2900200010XP	20	10
2900200015XP	20	15
2900200020XP	20	20
2900200025XP	20	25
2900200040XP	20	40
2900200050XP	20	50
2900250005XP	25	5
2900250010XP	25	10
2900250015XP	25	15
2900250020XP	25	20
2900250025XP	25	25
2900250040XP	25	40
2900250050XP	25	50
2900320005CP	32	5
2900320010CP	32	10
2900320015CP	32	15
2900320020CP	32	20
2900320025CP	32	25
2900320040CP	32	40
2900320050CP	32	50
2900400005CP	40	5
2900400010CP	40	10
2900400015CP	40	15
2900400020CP	40	20
2900400025CP	40	25
2900400040CP	40	40
2900400050CP	40	50

9146	Bore mm	Stroke mm
2900500005CP	50	5
2900500010CP	50	10
2900500015CP	50	15
2900500020CP	50	20
2900500025CP	50	25
2900500040CP	50	40
2900500050CP	50	50
2900630005CP	63	5
2900630010CP	63	10
2900630015CP	63	15
2900630020CP	63	20
2900630025CP	63	25
2900630040CP	63	40
2900630050CP	63	50
2900800005AP	80	5
2900800010AP	80	10
2900800015AP	80	15
2900800020AP	80	20
2900800025AP	80	25
2900800040AP	80	40
2900800050AP	80	50
2900100005AP	100	5
2900100010AP	100	10
2900100015AP	100	15
2900100020AP	100	20
2900100025AP	100	25
2900100040AP	100	40
2900100050AP	100	50

CYLINDER GUIDE UNITS

H Type Guide Unit

Technical Data

20 mm Diameter

A	B	C	Ch1	Ch2	D	D1	E	F	G	H	Ø I1	Ø I2	J	K	L1	L2	L3	L4	L5	L6	N	O	P	Q	R	S	T	T1	U	V	W	W1	X	Y	X
79	34	37	12	27	17	8.5	15	78	32	12	12	10	M5	M6	25	40	58	108	166	21	5.5	9	10	7.5	6.5	11	6.5	38	38	68	62.5	72	20	23	58

32-63 mm Diameter

A	B	C	Ch	D	E	F	G	H	ØI	L1	L2	L3	L4	L5	L6	N	O	P	Q	R	T	U	V	V1	Z
97	49	51	15	24	4.3	93	45	12	12	25	42	75	125	187	25	6.6	12	11	6.5	M6	78	61	32.5	82.7	74
115	58	58.2	15	28	11	112	55	12	16	25	42	80	140	207	30	6.6	12	11	6.5	M6	84	69	38	86	87
137	70	70.2	20	34	18.8	134	65	15	20	25	50	78	148	223	35	9	16	15	8.5	M8	100	85	46.5	92	104
152	85	82.5	20	34	15.3	147	80	15	20	25	50	106	178	243	25	9	16	15	9	M8	105	100	56.5	96.7	119

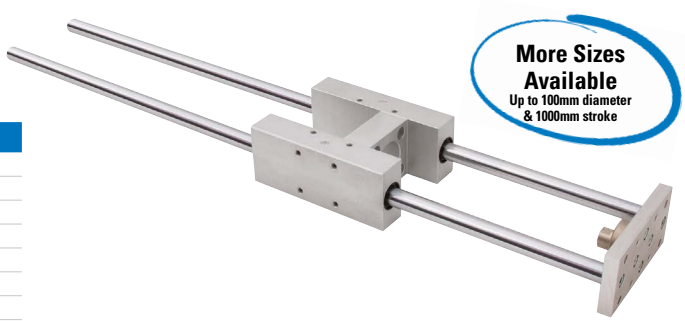

With Self-lubricating Bushings

9147	Diameter mm	Stroke mm
HGU020-0100	20	100
HGU020-0200	20	200
HGU020-0250	20	250
HGU020-0320	20	320
HGU020-0400	20	400
HGU020-0500	20	500
HGU032-0100	32	100
HGU032-0200	32	200
HGU032-0250	32	250
HGU032-0320	32	320
HGU032-0400	32	400
HGU032-0500	32	500
HGU040-0100	40	100
HGU040-0200	40	200
HGU040-0250	40	250
HGU040-0320	40	320
HGU040-0400	40	400
HGU040-0500	40	500
HGU050-0100	50	100
HGU050-0200	50	200
HGU050-0250	50	250
HGU050-0320	50	320
HGU050-0400	50	400
HGU050-0500	50	500
HGU063-0100	63	100
HGU063-0200	63	200
HGU063-0250	63	250
HGU063-0320	63	320
HGU063-0400	63	400
HGU063-0500	63	500

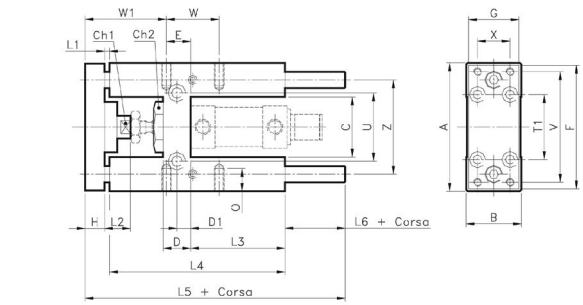

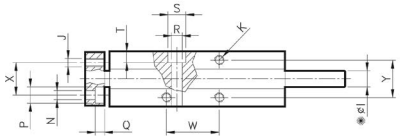

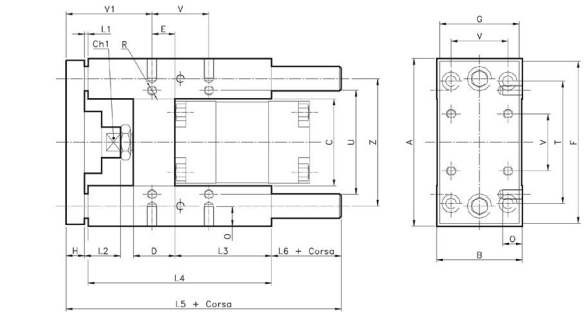

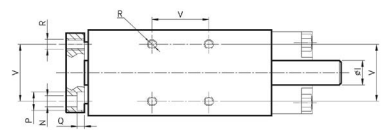

CYLINDER GUIDE UNITS

U Type Guide Unit

Technical Data

20 mm Diameter

A	B	C	Ch1	Ch2	D	D1	E	F	G	H	Ø I1	Ø I2	J	K	L1	L2	L3	L4	L5	L6	N	O	P	Q	R	S	T	T1	U	V	W	W1	X	Y	X
79	34	37	12	27	17	8.5	15	78	32	12	12	10	M5	M6	25	40	58	108	166	21	5.5	9	10	7.5	6.5	11	6.5	38	38	68	62.5	72	20	23	58

32-63 mm Diameter

A	B	C	Ch	D	E	F	G	H	ØI	L1	L2	L3	L4	L5	L6	N	O	P	Q	R	T	U	V	V1	Z
97	49	51	15	24	4.3	93	45	12	12	25	42	75	125	187	25	6.6	12	11	6.5	M6	78	61	32.5	82.7	74
115	58	58.2	15	28	11	112	55	12	16	25	42	80	140	207	30	6.6	12	11	6.5	M6	84	69	38	86	87
137	70	70.2	20	34	18.8	134	65	15	20	25	50	78	148	223	35	9	16	15	8.5	M8	100	85	46.5	92	104
152	85	82.5	20	34	15.3	147	80	15	20	25	50	106	178	243	25	9	16	15	9	M8	105	100	56.5	96.7	119

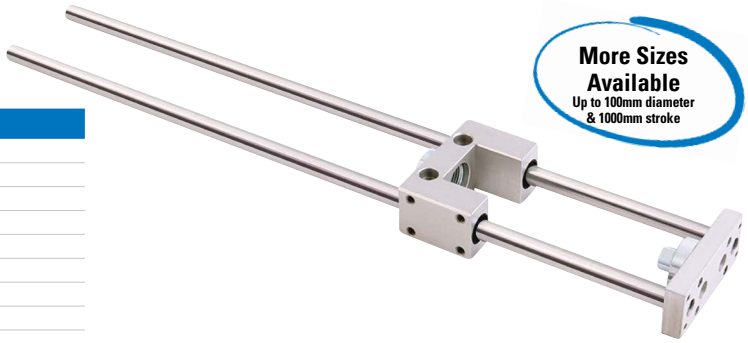

With Self-lubricating Bushings

9147	Diameter mm	Stroke mm
UGU020-0100	20	100
UGU020-0200	20	200
UGU020-0320	20	320
UGU020-0400	20	400
UGU020-0500	20	500
UGU032-0100	32	100
UGU032-0200	32	200
UGU032-0250	32	250
UGU032-0320	32	320
UGU032-0400	32	400
UGU032-0500	32	500
UGU040-0100	40	100
UGU040-0200	40	200
UGU040-0250	40	250
UGU040-0320	40	320
UGU040-0400	40	400
UGU040-0500	40	500
UGU050-0100	50	100
UGU050-0200	50	200
UGU050-0250	50	250
UGU050-0320	50	320
UGU050-0400	50	400
UGU050-0500	50	500
UGU063-0100	63	100
UGU063-0200	63	200
UGU063-0250	63	250
UGU063-0320	63	320
UGU063-0400	63	400
UGU063-0500	63	500

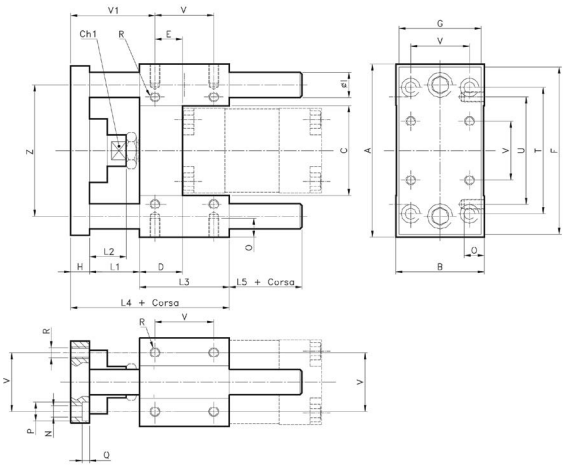

Rear End Plate

Technical Data

Ø	A	B	C	D	E	F	G	H	H2
20 - 25	58	51	95	70	48	23	12	12	10
32	74	31.5	68	45	33	15.5	12	12	12
40	87	58.2	113	80	55	26	12	16	16
50	104	70.2	134	100	67.5	32.5	15	20	20
63	119	91	147	120	82	39.5	15	20	20

To suit Guide Units

9147	Description
KG3043.20	For 20/25mm Guide Units
KG3043.32	For 32mm Guide Units
KG3043.40	For 40mm Guide Units
KG3043.50	For 50mm Guide Units
KG3043.63	For 63mm Guide Units

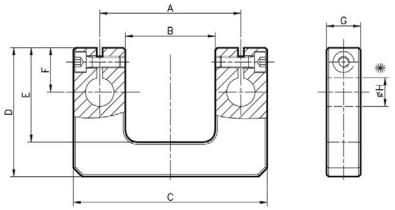

ISO 6432 MINI AIR CYLINDERS, ALL STAINLESS STEEL

ISO 6432 Mini Cylinders, Double Acting

Technical Specifications

ISO 6432 stainless steel micro-cylinders are available in various versions with a wide range of accessories

With or without magnet execution

Double-acting, single or through-rod

Gaskets: polyurethane or FKM/FPM (for high temperatures)

Fixing accessories

Fluid

Lubricated or non-lubricated air

Temperature Range:
10°C to +80°C

Maximum Operating Pressure:
10 bar

1. Piston rod: AISI 316 steel
2. Head: AISI 304 steel
3. Piston rod gasket: polyurethane or FKM/FPM
4. Guide bushing: sintered bronze
5. Barrel: AISI 304 steel
6. Piston: brass
7. Piston gasket: polyurethane or FKM/FPM
8. Magnet: plastoferrite
9. Static O-rings: NBR or FKM/FPM

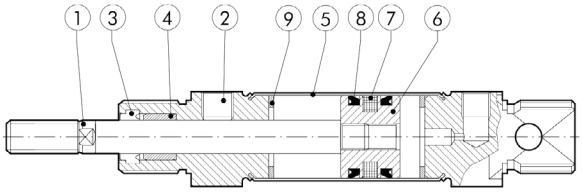

Magnetic

9157	Ø mm	Stroke mm
W1800160010	16	10
W1800160025	16	25
W1800160050	16	50
W1800160080	16	80
W1800160100	16	100
W1800160125	16	125
W1800160160	16	160
W1800160200	16	200
W1800160250	16	250
W1800160320	16	320
W1800200010	20	10
W1800200025	20	25
W1800200050	20	50
W1800200080	20	80
W1800200100	20	100
W1800200125	20	125
W1800200160	20	160

9157	Ø mm	Stroke mm
W1800200200	20	200
W1800200250	20	250
W1800200320	20	320
W1800200400	20	400
W1800250010	25	10
W1800250025	25	25
W1800250050	25	50
W1800250080	25	80
W1800250100	25	100
W1800250125	25	125
W1800250160	25	160
W1800250200	25	200
W1800250250	25	250
W1800250320	25	320
W1800250400	25	400
W1800250500	25	500

ISO 6432 MINI AIR CYLINDER ACCESSORIES, ALL STAINLESS STEEL

Foot Mountings

To suit ISO 6432 Mini Cylinders

9157	To Suit Size mm
W095X120001	16
W095X200001	20/25

Female Hinges

To suit ISO 6432 Mini Cylinders

9157	To Suit Size mm
W095X120005	16
W095X200005	20/25

Rod Nuts

To suit ISO 6432 Mini Cylinders

9157	To Suit Size mm	Thread
W095X120011	16	M6 x 1
W095X200011	20	M8 x 1
W095X322011	25/32	M10 x 1.25

Cylinder Head Nuts

To suit ISO 6432 Mini Cylinders

9157	To Suit Size mm	Thread
W095X120010	16	M16 x 1.25
W095X200010	20/25	M22 x 1.5

Flange

To suit ISO 6432 Mini Cylinders

9157	Size to Suit mm
W095X120002	16
W095X200002	20/25

Fork Clevis

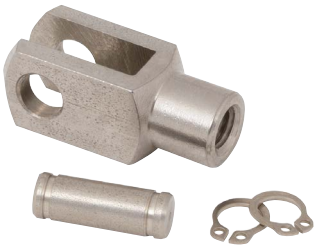

To suit ISO 6432 Cylinders

9157	To Suit Size mm	Thread
W095X120020	16	M6 x 1
W095X200020	20	M8 x 1
W095X322020	25/32	M10 x 1.25

Reed Switch

To suit ISO 6432 Mini Cylinders

9157	Description
W0952028184	With M8 Connection

Mounting for Reed Switch

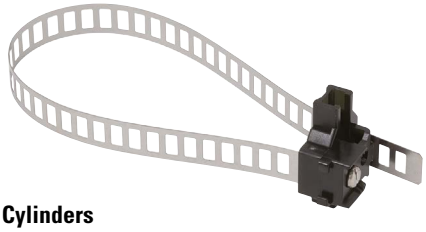

To suit ISO 6432 Mini Cylinders

9157	To Suit Size mm
W0950001103	8-63

ISO 15552 AIR CYLINDERS, ALL STAINLESS STEEL (FORMERLY ISO 6431)

Technical Specifications
Fluid: lubricated or non-lubricated air

Temperature Range:
10°C to +80°C

Maximum Operating Pressure:
10 bar

1. Piston rod: AISI 316 steel
2. Head: AISI 304 steel
3. Piston rod gasket: polyurethane or FKM/FPM
4. Guide bushing: sintered bronze
5. Barrel: AISI 304 steel
6. Enbloc gasket: NBR or FKM/FPM
7. Magnet: plastoferrite
8. Static O-rings: NBR or FKM/FPM
9. Cushioning gasket: polyurethane or FKM/FPM
10. Cushioning needle: AISI 304 steel
11. Tie rod: AISI 316 steel
12. Needle-retaining ring: technopolymer

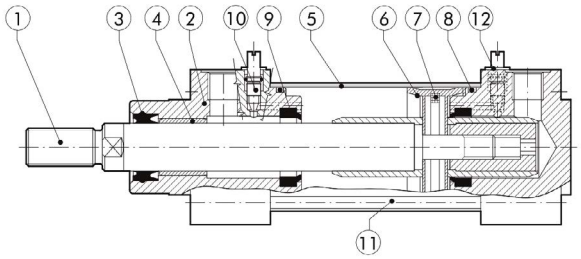

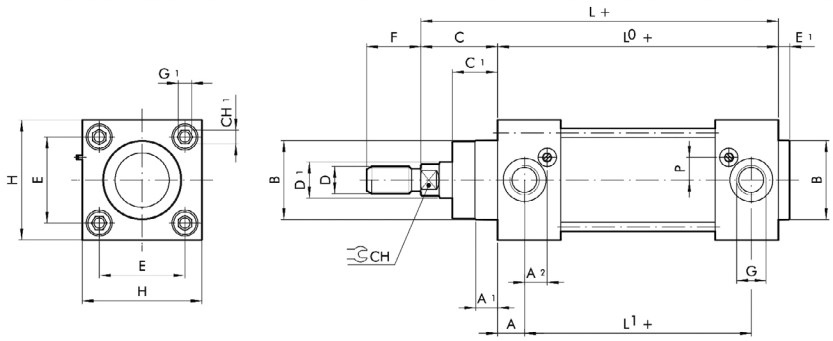

Ø	A	A_1	A_2	B	C	C_1	CH	CH_1	D	D_1	E	E_1	F	G	G_1	H	L	L_0	L_1	L_2	P
32	13	9	11.3	30	26	18	10	6	M10 x 1.25	12	32.5	4	22	G1/8	M6	50	120	94	68	146	6
40	14	9	13	35	30	22	13	6	M12 x 1.25	16	38	4	24	G1/4	M6	55	135	105	77	165	8
50	14	9	12.7	40	37	25.5	17	8	M16 x 1.5	20	46.5	4	32	G1/4	M8	65	143	106	78	180	11.8
63	16	9	15.8	45	37	25	17	8	M16 x 1.5	20	56.5	4	32	G3/8	M8	75	158	121	89	195	11.7
80	17	10	16.3	45	46	35	22	-	M20 x 1.5	25	72	4	40	G3/8	M10	95	174	128	94	220	15.5
100	18	10	15.5	55	51	38	22	-	M20 x 1.5	25	89	4	40	G1/2	M10	110	189	138	102	240	15.5
125	18	11	20	60	65	46	27	-	M27 x 2	32	110	6	54	G1/2	M12	140	225	160	124	290	15

ISO 15552 AIR CYLINDERS, ALL STAINLESS STEEL (FORMERLY ISO 6431)

ISO 15552 Cylinders, Double Acting

Technical Specifications
Fluid: lubricated or non-lubricated air

Temperature Range:
10ºC to +80ºC

Maximum Operating Pressure:
10 bar

Magnetic

9157	Diameter mm	Stroke mm
W1840320025	32	25
W1840320050	32	50
W1840320080	32	80
W1840320100	32	100
W1840320125	32	125
W1840320160	32	160
W1840320200	32	200
W1840320250	32	250
W1840320320	32	320
W1840320400	32	400
W1840320500	32	500
W1840400025	40	25
W1840400050	40	50
W1840400080	40	80
W1840400100	40	100
W1840400125	40	125
W1840400160	40	160
W1840400200	40	200
W1840400250	40	250
W1840400320	40	320
W1840400400	40	400
W1840400500	40	500
W1840500025	50	25
W1840500050	50	50
W1840500080	50	80
W1840500100	50	100
W1840500125	50	125
W1840500160	50	160
W1840500200	50	200
W1840500250	50	250
W1840500320	50	320
W1840500400	50	400
W1840500500	50	500

9157	Diameter mm	Stroke mm
W1840630025	63	25
W1840630050	63	50
W1840630080	63	80
W1840630100	63	100
W1840630125	63	125
W1840630160	63	160
W1840630200	63	200
W1840630250	63	250
W1840630320	63	320
W1840630400	63	400
W1840630500	63	500
W1840800025	80	25
W1840800050	80	50
W1840800080	80	80
W1840800100	80	100
W1840800125	80	125
W1840800160	80	160
W1840800200	80	200
W1840800250	80	250
W1840800320	80	320
W1840800400	80	400
W1840800500	80	500
W1841000025	100	25
W1841000050	100	50
W1841000080	100	80
W1841000100	100	100
W1841000125	100	125
W1841000160	100	160
W1841000200	100	200
W1841000250	100	250
W1841000320	100	320
W1841000400	100	400
W1841000500	100	500

ISO 15552 AIR CYLINDER ACCESSORIES, ALL STAINLESS STEEL (FORMERLY ISO 6431)

Foot Mounting

To suit ISO 15552 Cylinders

9157	To Suit Size mm
W095X322001	32
W095X402001	40
W095X502001	50
W095X632001	63
W095X802001	80
W095XA12001	100

Male 90° Hinge

To suit ISO 15552 Cylinders

9157	To Suit Size mm
W095X322008	32
W095X402008	40
W095X502008	50
W095X632008	63
W095X802008	80
W095XA12008	100

Male Hinge

To suit ISO 15552 Cylinders

9157	To Suit Size mm
W095X322004	32
W095X402004	40
W095X502004	50
W095X632004	63
W095X802004	80
W095XA12004	100

Female Hinge

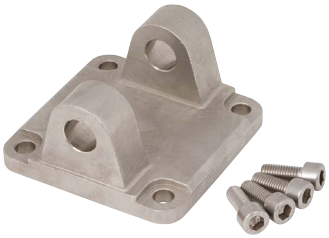

To suit ISO 15552 Cylinders

9157	To Suit Size mm
W095X322003	32
W095X402003	40
W095X502003	50
W095X632003	63
W095X802003	80
W095XA12003	100

ISO 15552 AIR CYLINDER ACCESSORIES, ALL STAINLESS STEEL (FORMERLY ISO 6431)

Hinge Pin

To suit ISO 15552 Cylinders

9157	To Suit Size mm
W095X322050	32
W095X402050	40
W095X502050	50
W095X632050	63
W095X802050	80
W095XA12050	100

Fork Clevis

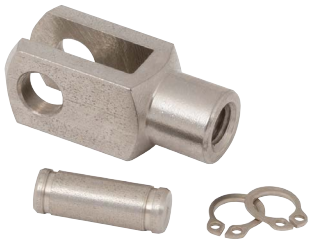

To suit ISO 15552 Cylinders

9157	To Suit Size mm	Thread
W095X322020	25/32	M10 x 1.25
W095X402020	40	M12 x 1.25
W095X502020	50/63	M16 x 1.5
W095X802020	80/100	M20 x 1.5

Intermediate Hinge

To suit ISO 15552 Cylinders

9157	To Suit Size mm
W095X322007	32
W095X402007	40
W095X502007	50
W095X632007	63
W095X802007	80
W095XA12007	100

Flange

To suit ISO 15552 Cylinders

9157	To Suit Size mm
W095X322002	32
W095X402002	40
W095X502002	50
W095X632002	63
W095X802002	80
W095XA12002	100

Rod Nuts

To suit ISO 15552 Cylinders

9157	To Suit Size	Thread
W095X322011	25/32	M10 x 1.25
W095X402011	40	M12 x 1.25
W095X502011	50/63	M16 x 1.5
W095X802011	80/100	M20 x 1.5

Reed Switch

To suit ISO 15552 Cylinders

9157	Thread
W0952022180	With Moulded Cable
W0952028184	With M8 Connection

Mounting for Reed Switch

To suit ISO 15552 Cylinders

9157
W0950001100

FLOW MICRO-REGULATORS

Series Compact 'O'

Technical Features

- The job of flow micro-regulators is to regulate speed in the pneumatic cylinders. The configuration of both type C (to be mounted on the cylinder inlet) and type V (to be mounted on the valve port) is such as to ensure full flow on feed and regulated flow on charge. Type B (bidirectional) can be used to regulate the flow both on feed and discharge. Flow micro-regulators are divided into 4 series:
- MRF Compact 'O': Can be adjusted using a screwdriver; the regulation pin is lubricated with a particular anti-vibration grease;
  it has reduced dimensions and fine adjustment in the first turns; adjustment can be prevented by assembling a disposable cap (supplied separately) that can be removed using a tool.
- MRF Compact 'N': Can be adjusted using the knob and/or screwdriver; adjustment can be prevented by tightening the ring nut;
  it has the same regulation curve as those in series 'O'.

Main Features

- Reduced dimensions
- Excellent regulation
- Regulation with a screwdriver and disposable anti-tampering cap (Compact 'O')
- Regulation with either a screwdriver and/or a knob, can be fixed with a ring nut (Compact 'N')
- Available in all sizes (from M5 to 1/2") with a brass or a technopolymer ring
- Can be mounted with an automatic screwdriver
- Comes with a ring that can rotate even with the MRF mounted in position

Working Temperature Range:
-10ºC to +70ºC (Brass Ring)
-10ºC to +50ºC (Technopolymer Ring)

Maximum Working Pressure:
10 bar

MRF Compact 'O' Brass Ring

9148	Thread BSPT	Tube OD mm
9001001C	M5	4
9001110V	M5	4
9001601B	M5	4
9001002C	M5	5
9001113V	M5	5
9001603B	M5	5
9001007C	M5	6
9001105V	M5	6
9001612B	M5	6
9001011C	R1/8"	4
9001111V	R1/8"	4
9001602B	R1/8"	4
9001012C	R1/8"	5
9001112V	R1/8"	5
9001604B	R1/8"	5

9148	Thread BSPT	Tube OD mm
9001003C	R1/8"	6
9001101V	R1/8"	6
9001605B	R1/8"	6
9001103V	R1/8"	8
9001607B	R1/8"	8
9001004C	R1/4"	6
9001102V	R1/4"	6
9001006C	R1/4"	8
9001104V	R1/4"	8
9001608B	R1/4"	8
9001010C	R3/8"	8
9001115V	R3/8"	8
9001611B	R3/8"	8
9001008C	R1/4"	10

9148	Thread BSPT	Tube OD mm
9001106V	R1/4"	10
9001609B	R1/4"	10
9001014C	R1/4"	12
9001123V	R1/4"	12
9001623B	R1/4"	12
9001009C	R3/8"	10
9001610B	R3/8"	10
9001015C	R3/8"	12
9001124V	R3/8"	12
9001624B	R3/8"	12
9001016C	R1/2"	12
9001125V	R1/2"	12
9001625B	R1/2"	12
9001114V	R3/8"	10

FLOW MICRO-REGULATORS

MRF Compact 'O' Technopolymer Ring

Type C to suit Cylinder

9148	Thread BSPT	Tube OD mm
9011001C	M5	4
9011007C	M5	6
9011011C	R1/8"	4
9011003C	R1/8"	6
9011005C	R1/8"	8
9011004C	R1/4"	6
9011006C	R1/4"	8
9011008C	R1/4"	10
9011014C	R1/4"	12
9011009C	R3/8"	10
9011015C	R3/8"	12
9011016C	R1/2"	12

Type V to suit Valves

9148	Thread BSPT	Tube OD mm
9011110V	M5	4
9011105V	M5	6
9011111V	R1/8"	4
9011101V	R1/8"	6
9011103V	R1/8"	8
9011102V	R1/4"	6
9011104V	R1/4"	8
9011106V	R1/4"	10
9011123V	R1/4"	12
9011114V	R3/8"	10
9011124V	R3/8"	12
9011125V	R1/2"	12

Type B bidirectional to suit Cylinders & Valves

9148	Thread BSPT	Tube OD mm
9011601B	M5	4
9011612B	M5	6
9011602B	R1/8"	4
9011605B	R1/8"	6
9011607B	R1/8"	8
9011606B	R1/4"	6
9011608B	R1/4"	8
9011609B	R1/4"	10
9011623B	R1/4"	12
9011610B	R3/8"	10
9011624B	R3/8"	12
9011625B	R1/2"	12

MRF Compact 'O' Threaded Brass Ring

Type C to suit Cylinder

9148	Thread BSPT	Tube OD
9001020C	R1/8"	1/8"
9001021C	R1/4"	1/4"
9001022C	R3/8"	3/8"

Type V to suit Valves

9148	Thread BSPT	Tube OD
9001120V	R1/8"	1/8"
9001121V	R1/4"	1/4"
9001122V	R3/8"	3/8"

Type B Bidirectional to suit Cylinders & Valves

9148	Thread BSPT	Tube OD
9001620B	R1/8"	1/8"
9001621B	R1/4"	1/4"
9001622B	R3/8"	3/8"

Accessories for MRF Compact 'O'

Anti-tampering Cap

9148	To Fit Thread BSPT
9090001	M5
9090002	R1/8" - R1/4"
9090003	R3/8" - R1/2"

MRF Compact 'N' Brass Ring

Type C to suit Cylinder

9148	Thread BSPT	Tube OD mm
9031001C	M5	4
9031003C	M5	5
9031005C	M5	6
9031002C	R1/8"	4
9031004C	R1/8"	5
9031006C	R1/8"	6
9031008C	R1/8"	8
9031007C	R1/4"	6
9031009C	R1/4"	8
9031010C	R3/8"	8
9031011C	R1/4"	10
9031014C	R1/4"	12
9031012C	R3/8"	10
9031015C	R3/8"	12
9031016C	1/2"	12

Type V to suit Valves

9148	Thread BSPT	Tube OD mm
9031101V	M5	4
9031103V	M5	5
9031105V	M5	6
9031102V	R1/8"	4
9031104V	R1/8"	5
9031106V	R1/8"	6
9031108V	R1/8"	8
9031107V	R1/4"	6
9031109V	R1/4"	8
9031110V	R3/8"	8
9031111V	R1/4"	10
9031114V	R1/4"	12
9031112V	R3/8"	10
9031115V	R3/8"	12
9031116V	1/2"	12

Type B Bidirectional to suit Cylinders & Valves

9148	Thread BSPT	Tube OD mm
9031201B	M5	4
9031203B	M5	5
9031205B	M5	6
9031202B	R1/8"	4
9031204B	R1/8"	5
9031206B	R1/8"	6
9031208B	R1/8"	8
9031207B	R1/4"	6
9031209B	R1/4"	8
9031210B	R3/8"	8
9031211B	R1/4"	10
9031214B	R1/4"	12
9031212B	R3/8"	10
9031215B	R3/8"	12
9031216B	1/2"	12

FLOW MICRO-REGULATORS

MRF Compact 'N' Technopolymer Ring

Type C to suit Cylinder

9148	Thread BSPT	Tube OD mm
9021001C	M5	4
9021005C	M5	6
9021002C	R1/8"	4
9021006C	R1/8"	6
9021008C	R1/8"	8
9021007C	R1/4"	6
9021009C	R1/4"	8
9021011C	R1/4"	10
9021014C	R1/4"	12
9021012C	R3/8"	10
9021212C	R3/8"	10
9021015C	R3/8"	12
9021016C	R1/2"	12

Type V to suit Valves

9148	Thread BSPT	Tube OD mm
9021101V	M5	4
9021105V	M5	6
9021102V	R1/8"	4
9021106V	R1/8"	6
9021108V	R1/8"	8
9011107V	R1/4"	6
9021109V	R1/4"	8
9021111V	R1/4"	10
9021114V	R1/4"	12
9021112V	R3/8"	10
9021115V	R3/8"	12
9021116V	R1/2"	12

Type B Bidirectional to suit Cylinders & Valves

9148	Thread BSPT	Tube OD mm
9021201B	M5	4
9021205B	M5	6
9021202B	R1/8"	4
9021206B	R1/8"	6
9021208B	R1/8"	8
9021207B	R1/4"	6
9021209B	R1/4"	8
9021211B	R1/4"	10
9021214B	R1/4"	12
9021215B	R3/8"	12
9021216B	R1/2"	12

MRF Compact 'N' Threaded Brass Ring

Type C to suit Cylinder

9148	Thread BSPT	Tube OD
9031301C	R1/8"	1/8"
9031302C	R1/4"	1/4"
9031303C	R3/8"	3/8"

Type V to suit Valves

9148	Thread BSPT	Tube OD
9031401V	R1/8"	1/8"
9031402V	R1/4"	1/4"
9031403V	R3/8"	3/8"

Type B Bidirectional to suit Cylinders & Valves

9148	Thread BSPT	Tube OD
9031501B	R1/8"	1/8"
9031502B	R1/4"	1/4"
9031503B	R3/8"	3/8"

BLOCK FITTINGS

Blocking Fitting

Stop valves mounted on the cylinder inlets allow a flow of air only in the presence of a pneumatic pilot. This item is mainly used as a safety valve. When pressure drops in the pneumatic pilot, all cylinder movement is halted.

Technical Data

	Bidirectional			
	1/8"	1/4"	3/8"	1/2"
Operating Pressure bar	0.5-10			
Operating temperature °C	-10° to +60°			
Flow rate (6 bar)	320	700	1060	1700

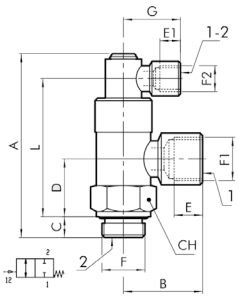

Fully Threaded

9148	F	F1	F2
W6001101001	G1/8"	G1/8"	G1/8"
W6001111011	G1/4"	G1/4"	G1/8"
W6001121021	G3/8"	G3/8"	G1/8"

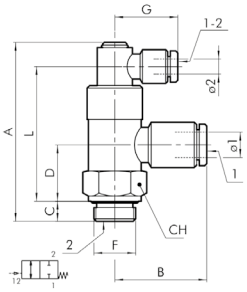

Tube Fittings

9148	F	Ø1 mm	Ø2 mm
W6001101106	G1/8"	6	4
W6001111106	G1/4"	6	4
W6001111108	G1/4"	8	4
W6001121108	G3/8"	8	4
W6001121110	G3/8"	10	4
W6001131112	G1/2"	12	4

FLOW CONTROL VALVES

Unidirectional In-line Flow Control

To suit Cylinders

9148	Thread BSP	Mounting Thread
9041001	M5	M10 x 0.75
9041002	G1/8″	M12 x 1
9041003	G1/4″	M12 x 1
9041004	G3/8″	M15 x 1
9041005	G1/2″	M15 x 1

Bidirectional In-line Flow Control

To suit Cylinders

9148	Thread BSP	Mounting Thread
9041201	M5	M10 x 0.75
9041202	G1/8″	M12 x 1
9041203	G1/4″	M12 x 1
9041204	G3/8″	M15 x 1
9041205	G1/2″	M15 x 1

Unidirectional Flow Control

With Push-in Fittings

9148	Ø	Mounting Thread
9041301	4	M9 x 0.75
9041316	6	M12 x 0.7
9041324	8	M15 x 1

Unidirectional Flow Control Fittings

➤ Flow Direction

Flow Direction Thread to Tube

9148	Thread BSP	Tube Ø
9041401	M5	4
9041402	G1/8″	4
9041408	G1/8″	6
9041409	G1/4″	6
9041410	G1/8″	8
9041411	G1/4″	8
9041412	G3/8″	8

Unidirectional Flow Control Fittings

➤ Flow Direction

Flow Direction Tube to Thread

9148	Thread BSP	Tube Ø
9041501	M5	4
9041502	G1/8″	4
9041508	G1/8″	6
9041509	G1/4″	6
9041510	G1/8″	8
9041511	G1/4″	8
9041512	G3/8″	8

Quick Exhaust Valves

BSP

9149	Thread BSP
9101201	1/8″
9201201	1/4″
9401201	1/2″

FUNCTIONAL FITTINGS

lineonline

LINE OF PRODUCTS ON LINE

Line on Line is an exclusive range of products for mounting on pneumatic circuits. With these small, highly efficient components it is possible to perform all pneumatic functions at any point of the circuit.

Line on Line is ultra-modular; the components can be connected in parallel, in series or combined parallel/series.

All Line on Line products are available for pipe-pipe connection with integral push-in fittings, or for thread-pipe connection with a brass nickel-plated male thread and an integral push-in fitting.

The body is made of technopolymer, giving a product that is extremely lightweight and compact. One side of the body is marked with an indelible pneumatic symbol to facilitate identification and indicate the direction of flow.

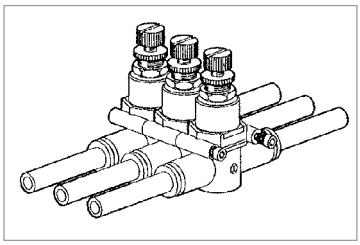

Parallel Lines

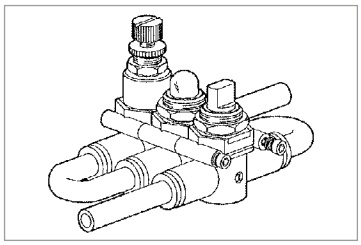

Serial Line Parallel Fittings

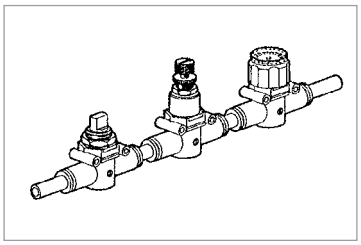

Serial Line In-line Fittings

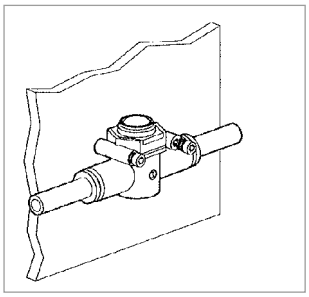

Wall Fixing

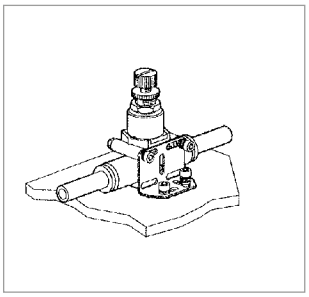

Plate Fixing

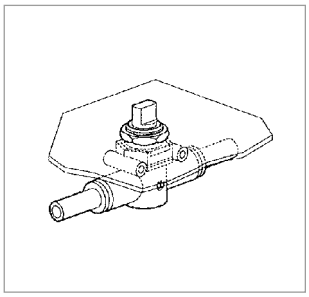

Panel Fixing

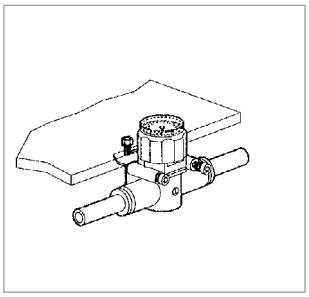

Under Wall Fixing

Technical Specifications

- Maximum operating pressure: 10 bar
- Temperature range: -20°C to +60°C
- Maximum flow rate on regulation at 6.3 bar: 155 Nl/min (4mm), 450 Nl/min (6mm), 850 Nl/min (8mm)
- Adjustment: manual or using a screwdriver
- Internal system: tapered needle
- Recommended pipe: Rilson PA 11, nylon 6, polyamide 12, polypropylene
- Fluid: lubricated or non-lubricated filtered air

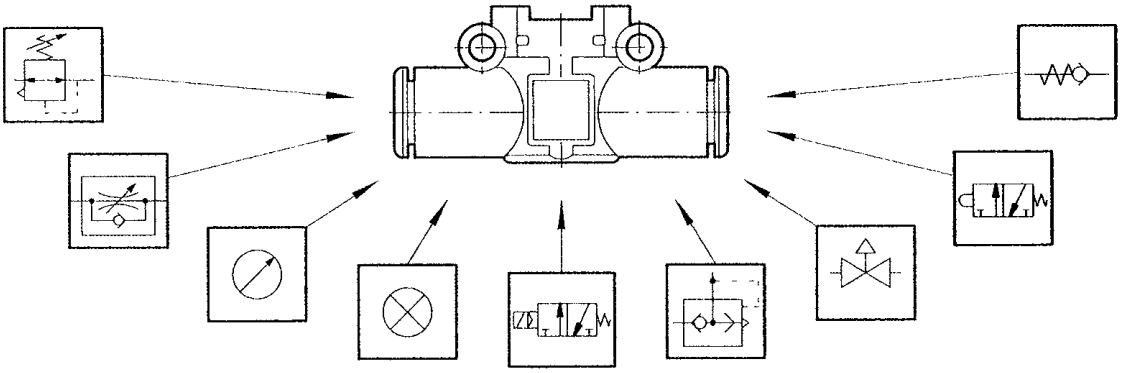

FUNCTIONAL FITTINGS

Line Mounted Pressure Regulator

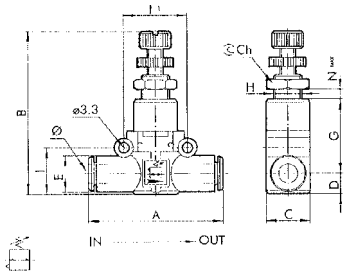

lineonline

Tube to Tube

9148	Ø	A	B	C	D	E
9061316	6	47	46-52	14.7	6.4	11.4
9061324	8	55.5	52-58	18.7	9.1	13.8

In-line Quick Exhaust Valve

Fig. A.

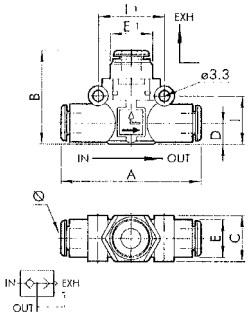

Fig. B.

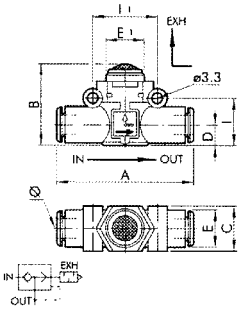

lineonline

Tube to Tube

9148	Ø	Figure	A	B	C	D	E	E1	I	I1
9063016	6	A	47	29	14.7	6.4	11.4	13	14.6	20
9063024	8	A	55.5	35	18.7	9.1	13.8	15	18.7	24
9063116	6	B	47	25.5	14.7	6.4	11.4	14	14.6	20
9063124	8	B	55.5	31.5	18.7	9.1	13.8	18	18.7	24

In-line Quick Exhaust Valve

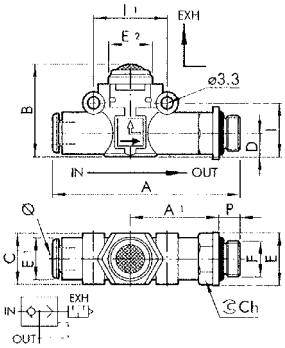

lineonline

Tube to Thread

9148	Ø	Figure	P	A	A1	B	C	D	E	E1	E2	I	I1	I2
9063308	6	1/8	6	57.3	27.8	25.5	14.7	6.4	14	11.4	14	14.6	20	12
9063309	6	1/4	8	60.3	28.8	25.5	14.7	6.4	18	11.4	14	14.6	20	14
9063310	8	1/8	6	65.5	31.8	31.5	18.7	9.1	15	13.8	18	18.7	24	13
9063311	8	1/4	8	69.7	34.2	31.5	18.7	9.1	18	13.8	18	18.7	24	14

In-line Check Valve

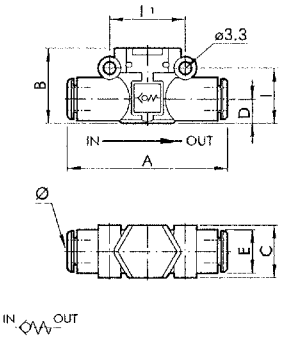

Tube to Tube

9148	Ø	A	B	C	D	E	I	I1
9064016	6	47	20	14.7	6.4	11.4	14.6	20
9064024	8	55.5	25.5	18.7	9.1	13.8	18.7	24

FUNCTIONAL FITTINGS

In-line Shut-off Valve

Technical Data
- Inlet Flow rate at 6.3 bar ΔP 1 bar: 280 Nl/min (6mm), 470 Nl/min (8mm)
- V2V L: on/off function
- V3V L: on/off function with vent

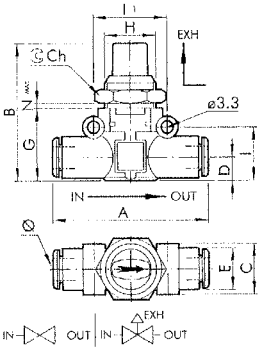

Tube to Tube

9148	Function	Ø	A	B	C	D	E	G	H	I	I1	Ch	Nmax
9065016	V2V L	6	47	41	14.7	6.4	11.4	21	M15 x 1	14.6	20	17	5.5
9066016	V3V L	6	47	41	14.7	6.4	11.4	21	M15 x 1	14.6	20	17	5.5
9065024	V2V L	8	55.5	46	18.7	9.1	13.8	26	M15 x 1	18.7	24	17	5.5
9066024	V3V L	8	55.5	46	18.7	9.1	13.8	26	M15 x 1	18.7	24	17	5.5

In-line Shut-off Valve, Lockable

Technical Data
- V2V L: on/off function
- V3V L: on/off function with vent

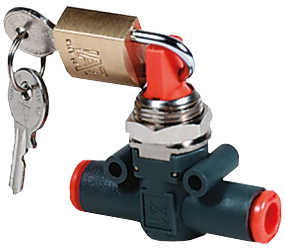

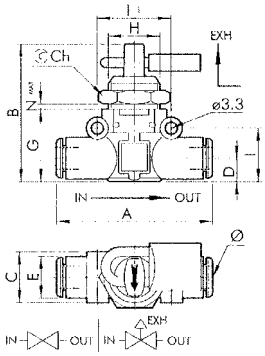

Tube to Tube

9148	Function	Ø	A	B	C	D	E	G	H	I	I1	Ch	Nmax
9065116	V2V L	6	47	41	14.7	6.4	11.4	21	M15 x 1	14.6	20	17	5.5
9066116	V3V L	6	47	41	14.7	6.4	11.4	21	M15 x 1	14.6	20	17	5.5
9065124	V2V L	8	55.5	46	18.7	9.1	13.8	26	M15 x 1	18.7	24	17	5.5
9066124	V3V L	8	55.5	46	18.7	9.1	13.8	26	M15 x 1	18.7	24	17	5.5

In-line Pressure Gauge

Technical Data
- Operating pressure: 12 bar
- Precision: +4% full scale

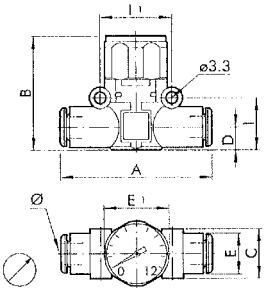

Tube to Tube

9148	Ø	A	B	C	D	E	E1	I	I1
9067016	6	47	35	14.7	6.4	11.4	23	14.6	20
9067024	8	55.5	41	18.7	9.1	13.8	23	18.7	24

Technical Data
- Operating pressure: 12 bar
- Precision: +4% full scale

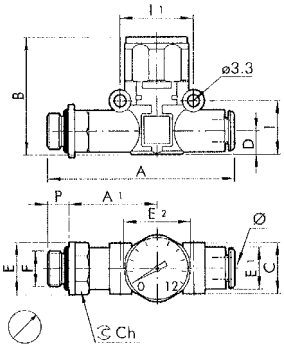

Thread to Tube

9148	Function	Ø	P	A	A1	B	C	D	E	E1	E2	I	I1	Ch
9067108	1/8	6	6	57.3	27.5	35	14.7	6.4	14	11.4	23	14.6	20	12
9067109	1/4	6	8	60.3	28.8	35	14.7	6.4	18	11.4	23	14.6	20	14
9067110	1/8	8	6	65.3	31.8	41	18.7	9.1	15	13.8	23	18.7	24	14
9067111	1/4	8	8	69.7	34.2	41	18.7	9.1	18	13.8	23	18.7	24	14

In-line Pressure Indicator

Technical Data
- Operating pressure: 2-12 bar
- A = Orange, V = Green

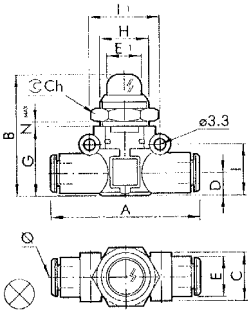

Tube to Tube

9148	Type	Ø	A	B	C	D	E	E1	G	H	I	I1	Ch	NmAX
9068016	A	6	47	37	14.7	6.4	11.4	10.6	21	M15 x 1	14.6	20	17	4.5
9068216	V	6	47	37	14.7	6.4	11.4	10.6	21	M15 x 1	14.6	20	17	4.5
9068024	A	8	55.5	41	18.7	9.1	13.8	10.6	26	M15 x 1	18.7	24	17	4.5
9068224	V	8	55.5	41	18.7	9.1	13.8	10.6	26	M15 x 1	18.7	24	17	4.5

FUNCTIONAL FITTINGS

In-line 3 Port Solenoid Valve, Silenced Exhaust

Technical Data
- Operating pressure: 2.5-7 bar
- Flow rate at 6.3 bar ΔP 0.5 bar: 270 NI/min (6mm),
- 500 NI/min (8mm)
- Voltage: 24V DC
- Power: 1.2W

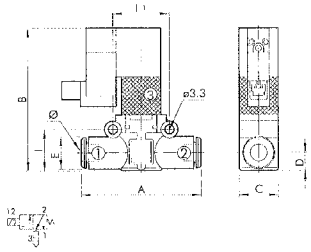

Tube to Tube

9148	Ø	A	B	C	D	E	I	I1
9069016	6	47	55.5	14.7	6.4	11.4	14.6	20
9069024	8	55.5	63.5	18.7	9.1	13.8	18.7	24

Technical Data
- Operating pressure: 2.5-7 bar
- Flow rate at 6.3 bar ΔP 0.5 bar: 270 NI/min, 500 NI/min
- Voltage: 24V DC
- Power: 1.2W

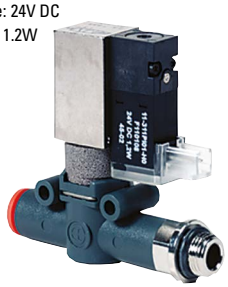

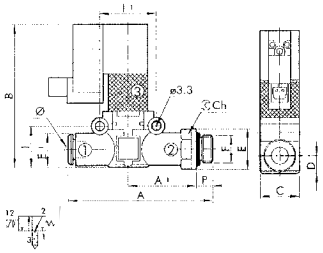

Thread to Tube

9148	Ø	F	P	A	A1	B	C	I	I1	Ch1
9069408	6	1/8	6	57.3	27.8	55.5	14.7	14.6	20	12
9069409	6	1/4	8	60.3	28.8	55.5	14.7	14.6	20	14
9069410	8	1/8	6	65.3	31.3	63.5	18.7	18.7	24	14
9069411	8	1/4	8	69.7	34.2	63.5	18.7	18.7	24	14

In-line 3 Port Solenoid Valve, Threaded Exhaust

Technical Data
- Operating pressure: 2.5 to 7 bar
- Flow rate at 6.3 bar ΔP 0.5 bar: 500 NI/min
- Voltage: 24V DC
- Power: 1.2W

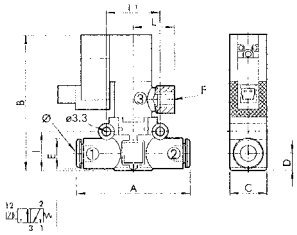

Tube to Tube

9148	Ø	A	B	C	D	E	E1	I	I1	L
9069224	8	55.5	63.5	18.7	9.1	13.8	1/8	18.7	24	21.5

In-line 3 Port Solenoid Valve, Silenced Exhaust

Technical Data
- Operating pressure: 2.5 to 7 bar
- Flow rate at 6.3 bar ΔP 0.5 bar: 270 NI/min, 500 NI/min
- Voltage: 24V DC
- Power: 1.2W

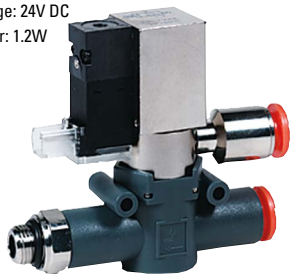

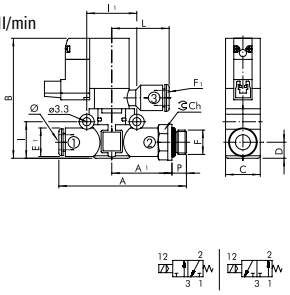

Tube to Thread

9148	Ø	F	P	A	A1	B	C	D	E	E1	F1	I	I1	L	Ch1
9069610	8	1/8	6	65.3	31.8	63.5	18.7	9.1	15	13.8	1/8	18.7	24	25.1	1
9069611	8	1/4	8	69.7	34.2	63.5	18.7	9.1	18	13.8	1/8	18.7	24	21.5	1

Electrical Connector

Plug-in

9148	Description
W0970512000	Plug-in Connector, 300mm Leads

Fixing Bracket

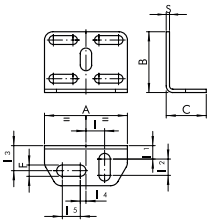

To suit All Line on Line Products

9148	A	B	C	F	I	I1	I2	13	14	15	S
9062110	30	22	14.5	4.2	6.8	4.8	5.9	9.1	2	6.5	1.2

U Tube

Tube

9148	OD mm
9062216	6
9062224	8

AIR PRESSURE MULTIPLIERS (BOOSTERS)

The air-to-air pressure multiplier, or booster, is an automatic device that compresses air to give an outlet pressure that is double the inlet pressure. It is normally used to locally intensify the input pressure of one or more actuators. As it is entirely pneumatic it can be used when electric devices are not recommended. The booster can be supplied with or without a pressure regulator.

It is fitted with check valves that maintain the outlet pressure even when the supply of compressed air is switched off. This means it is necessary to interrupt the supply and relieve the circuit before intervening on the device in any way. It is advisable to install a tank after the booster to prevent fluctuations in outlet pressure.

Technical Data

		Booster Ø40	Booster Ø40 with regulator	Booster Ø63	Booster Ø63 with regulator
Bore		Ø 40		Ø 63	
Fluid		Filtered unlubricated compressed air. Lubrication, if used, must be continuous.			
Threaded port		G1/8		G3/8	
Inlet pressure	**MPa**	0.2-1			
	bar	2-10			
	psi	29-145			
Outlet pressure	**MPa**	Maximum 2	Maximum 1.6 (regulated)	Maximum 2	Maximum 1.6 (regulated)
	bar	Maximum 20	Maximum 16 (regulated)	Maximum 20	Maximum 16 (regulated)
	psi	Maximum 290	Maximum 232 (regulated)	Maximum 290	Maximum 232 (regulated)
Operating temperature	**°C**	-10° to +60°	-10° to +50°	-10° to +60°	
	°F	+14° to +140°	+14° to +122°	+14° to +140°	
Weight	**gr**	1.380	1.600	4.240	5.350
Mounting		Wall or panel			
Installation		In any position			

Air Pressure Booster

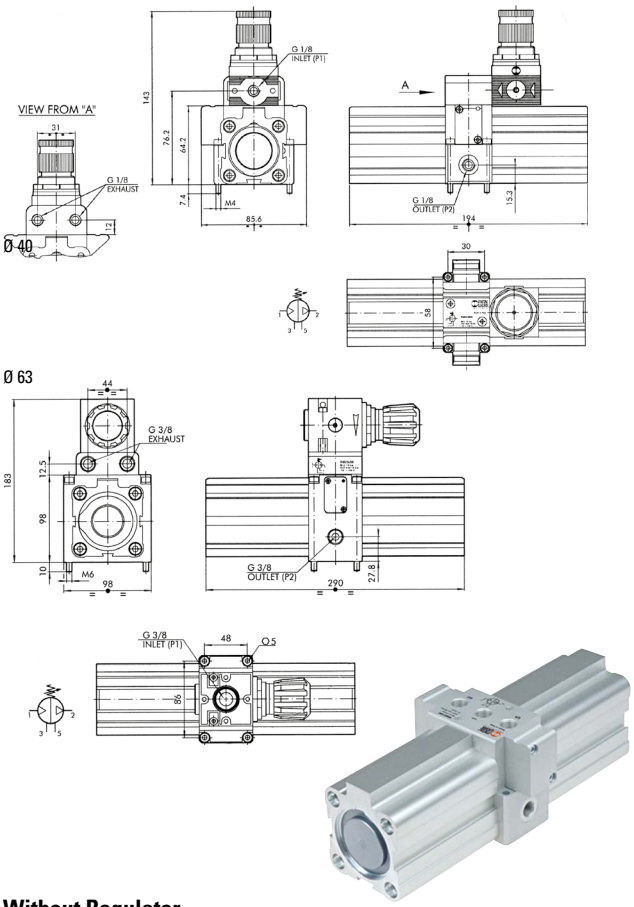

Without Regulator

9146	Description
9002100	40mm Diameter Booster, 1:2 Ratio
9002300	63mm Diameter Booster, 1:2 Ratio

Air Regulators

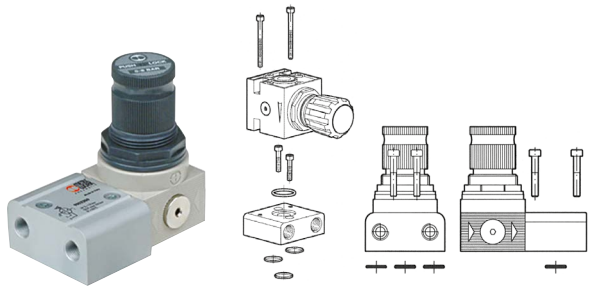

To suit Air Pressure Multiplier (Booster)

9193	Description
9002180	40mm Regulator Unit
9002380	63mm Regulator Unit

MECHANICAL VALVES, MINIATURE

Technical Data

- Valve fitting port: push-in fitting for pipe diameter, 4mm tube or M5 thread
- Fluid: filtered air without lubrication. Lubrication, if used, must be continuous
- Type: with poppet
- Nominal diameter: 2.5mm
- Conductance C: 16.5 Nl/min – bar
- Critical ratio b: 0.003 bar/bar
- Flow rate at 6 bar P 0.5 bar: 35 Nl/min
- Flow rate at 6 bar P 1 bar: 60 Nl/min
- Actuation force, plunger at 6 bar: 8N
- Recommended lubricant: ISO and UNI FD22
- Installation: in any position

Operating Temperature Range:
10°C to +60°C

Operating Pressure:
0.5-10 bar

'VME' Roller Valve

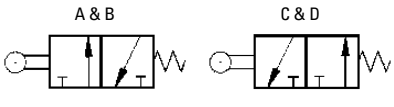

4mm Push-in Fittings

9149	Description	Figure
W3501000200	3/2 Way, Normally Closed, Bottom Ported	A
W3501001201	3/2 Way, Normally Closed, Side Ported	B
W3501000201	3/2 Way, Normally Open, Bottom Ported	C
W3501001200	3/2 Way, Normally Open, Side Ported	D

M5 Thread

9149	Description	Figure
W3501000211	3/2 Way, Normally Closed, Bottom Ported	A
W3501001211	3/2 Way, Normally Closed, Side Ported	B
W3501000210	3/2 Way, Normally Open, Bottom Ported	C
W3501001210	3/2 Way, Normally Open, Side Ported	D

'VME' One Way Roller Valve

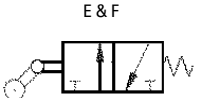

4mm Push-in Fittings

9149	Description	Figure
W3501000300	3/2 Way, Normally Closed, Bottom Ported	E
W3501001301	3/2 Way, Normally Closed, Side Ported	F

M5 Thread

9149	Description	Figure
W3501000311	3/2 Way, Normally Closed, Bottom Ported	E
W3501001311	3/2 Way, Normally Closed, Side Ported	F

'VME' Plunger Valve

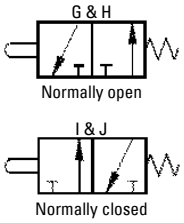

4mm Push-in Fittings

9149	Description	Figure
W3501000101	3/2 Way, Normally Open, Bottom Ported	G
W3501001100	3/2 Way, Normally Open, Side Ported	H
W3501000100	3/2 Way, Normally Closed, Bottom Ported	I
W3501001101	3/2 Way, Normally Closed, Side Ported	J

M5 Thread

9149	Description	Figure
W3501000110	3/2 Way, Normally Open, Bottom Ported	G
W3501001110	3/2 Way, Normally Open, Side Ported	H
W3501000111	3/2 Way, Normally Closed, Bottom Ported	I
W3501001111	3/2 Way, Normally Closed, Side Ported	J

'VME' Panel Mounted Plunger Valve

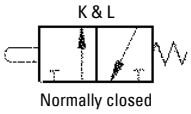

4mm Push-in Fittings

9149	Description	Figure
W3501000400	3/2 Way, Normally Closed, Bottom Ported	K
W3501001401	3/2 Way, Normally Closed, Side Ported	L

M5 Thread

9149	Description	Figure
W3501000411	3/2 Way, Normally Closed, Bottom Ported	K
W3501001411	3/2 Way, Normally Closed, Side Ported	L

Adaptor Plate

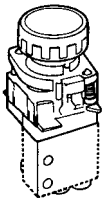

For 'VME' Push Button

9149	Description
0351000050	For Plunger Valves

See page 84 for dimensions

MECHANICAL VALVES, MINIATURE

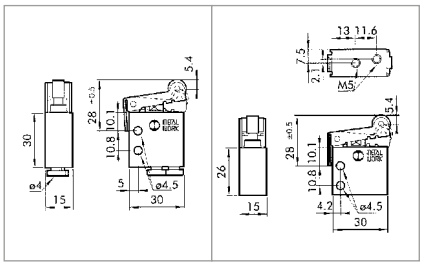

Figure: A

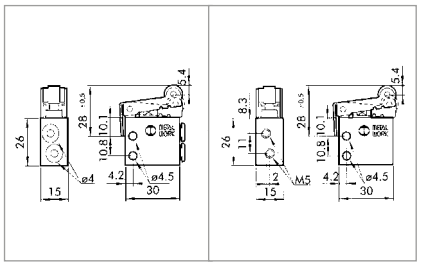

Figure: B

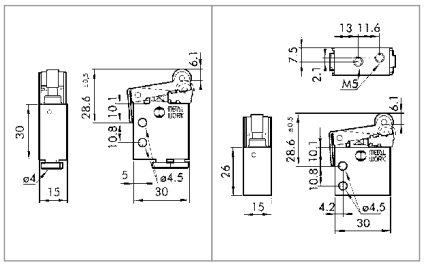

Figure: C

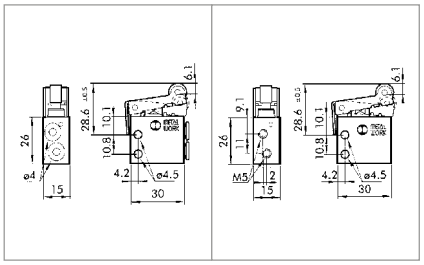

Figure: D

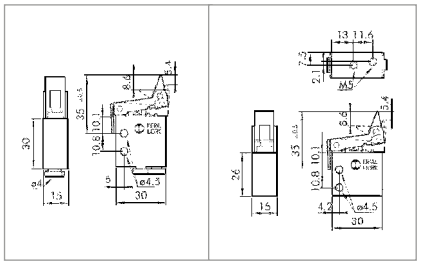

Figure: E

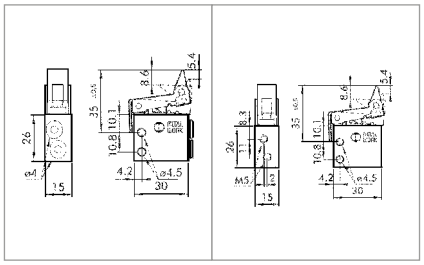

Figure: F

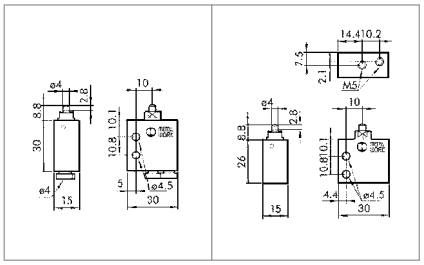

Figure: G

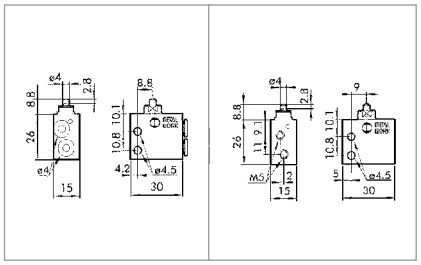

Figure: H

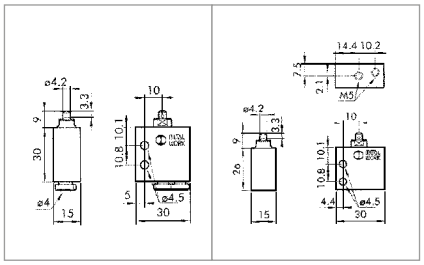

Figure: I

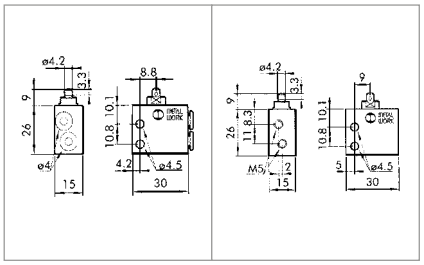

Figure: J

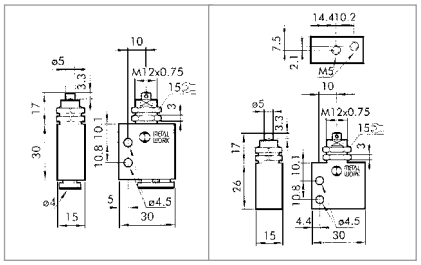

Figure: K

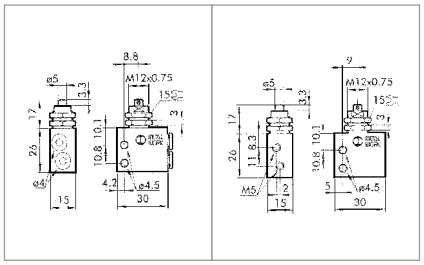

Figure: L

MECHANICAL VALVES

Push Button Actuator

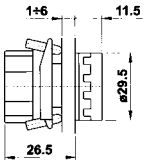

Protected

0335	Description
RM010	Push Button*
P22804V	Replacement Green Button
P22804G	Replacement Yellow Button
P22804A	Replacement White Button
P22804B	Replacement Blue Button

Mushroom Button Actuator

*With red and black alternative buttons.

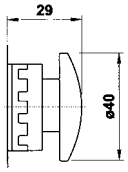

40mm

0335	Description
RM050R	Red, Monostable
RM050N	Black, Monostable
RM055R	Red, Multidirectional
RM055N	Black, Multidirectional
RM065R	Red, Twist to Unlock

Mushroom Button Actuator

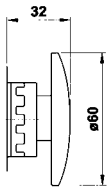

60mm

0335	Description
RM056R	Red, Multidirectional
RM066R	Red, Twist to Unlock
RM413N	Black, 2-0-1
RM483N	Black, 0-1-2

Selector Actuator

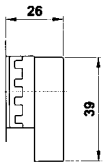

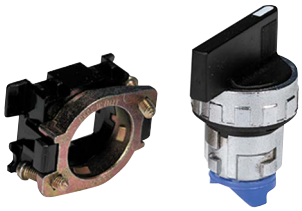

Long Lever

0335	Description
RM400N	Black, 0-1
RM450N	Black, 1-0
RM413N	Black, 2-0-1
RM483N	Black, 0-1-2

Selector Actuator

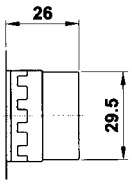

Short Lever

0335	Description
RM300N	Black, 0-1
RM350N	Black, 1-0
RM313N	Black, 2-0-1
RM383N	Black, 0-1-2

Selector Actuator

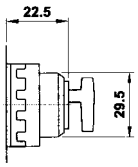

Key Operated

0335	Description
RM200N	Bistable Key Selector

MECHANICAL VALVES

Technical Specifications
- Nominal diameter: 5mm
- Flow rate at 6 bar P1Δ bar: 550 Nl/min

Operating Temperature Range:
10°C to +60°C

Operating Pressure:
Direct control version: vacuum to 10 bar
Servo piloted version: 2.5 to 10 bar

3/2 Plunger Valve

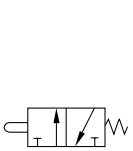
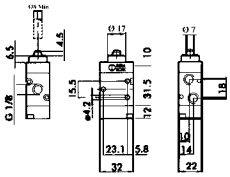

G1/8 Ports

9149	Description
7001000100	3/2 G1/8" Normally Closed

5/2 Plunger Valve

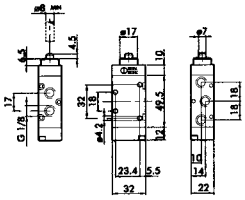

G1/8 Ports

9149	Description
7001000110	5/2 G1/8"

3/2 Roller Valve

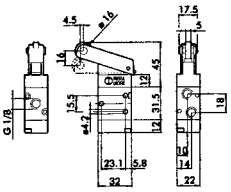

G1/8 Ports

9149	Description
7001000500	3/2 G1/8" Normally Closed

5/2 Roller Valve

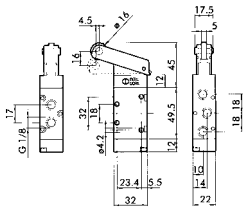

G1/8 Ports

9149	Description
7001000510	5/2 G1/8"

3/2 Unidirectional Lever Valve

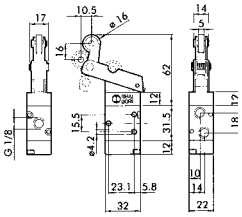

G1/8 Ports

9149	Description
7001000600	3/2 G1/8" Normally Closed

5/2 Unidirectional Lever Valve

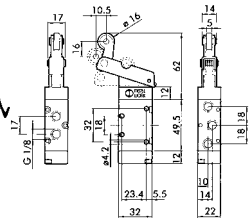

G1/8 Ports

9149	Description
7001000610	5/2 G1/8"

MECHANICAL VALVES

3/2 Sensitive Plunger Valve

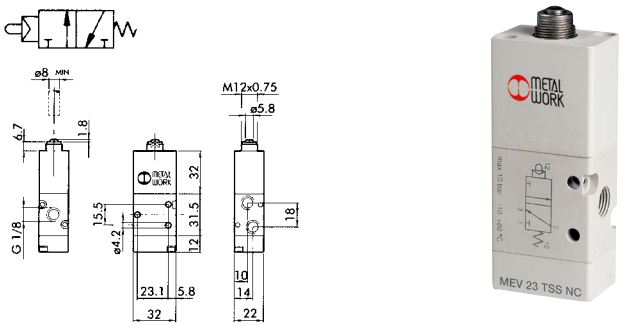

G1/8 Ports

9149	Description
7001000200	3/2 G1/8" Normally Closed

5/2 Sensitive Plunger Valve

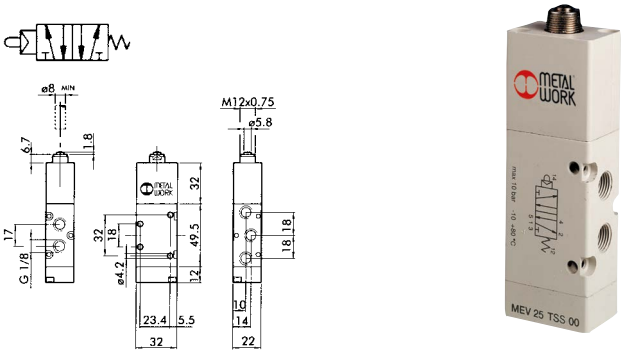

G1/8 Ports

9149	Description
7001000210	5/2 G1/8"

3/2 Sensitive Roller Lever Valve

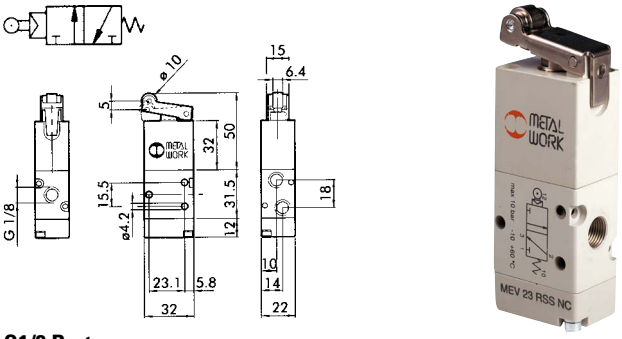

G1/8 Ports

9149	Description
7001000400	3/2 G1/8" Normally Closed

5/2 Sensitive Roller Lever Valve

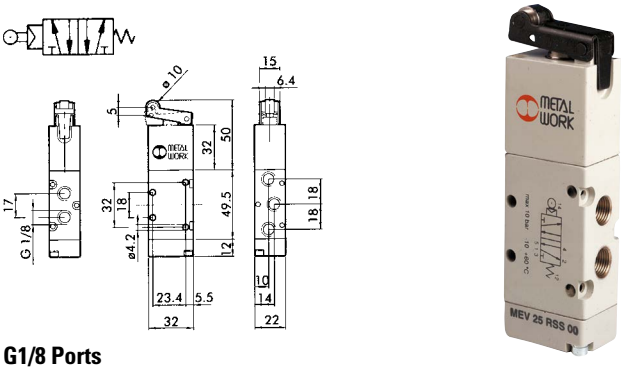

G1/8 Ports

9149	Description
7001000410	**5/2 G1/8"**

3/2 Sensitive Aerial Valve

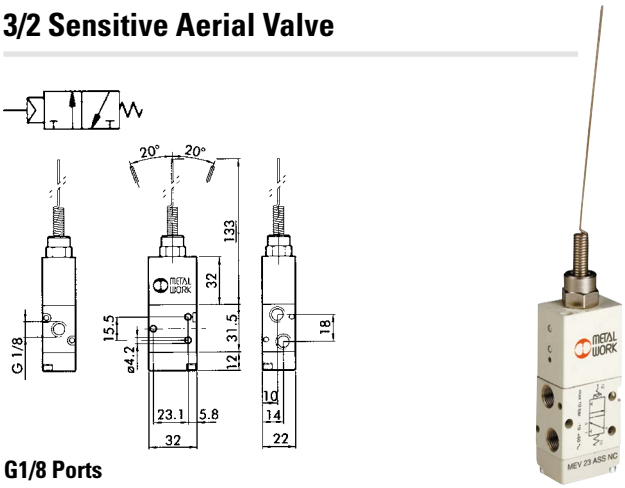

G1/8 Ports

9149	Description
7001000700	3/2 G1/8" Normally Closed

5/2 Sensitive Aerial Valve

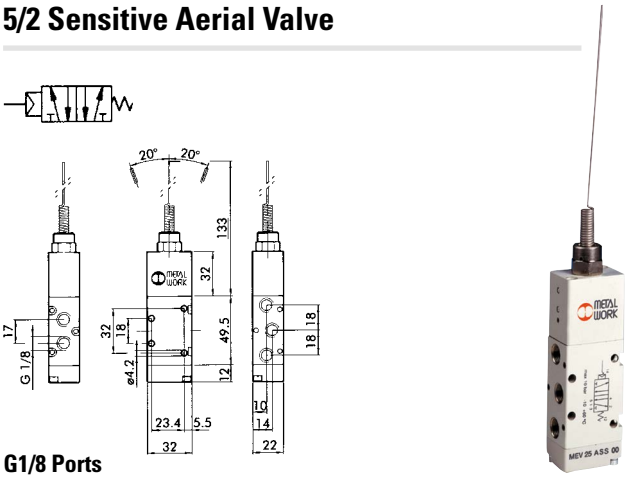

G1/8 Ports

9149	Description
7001000710	5/2 G1/8"

MECHANICAL VALVES

3/2 Plunger Valve for Manual Actuator

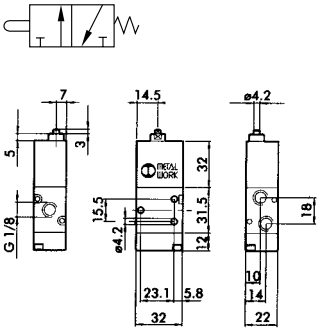

G1/8 Ports

9149	Description
7010001800	3/2 G1/8" Normally Closed

3/2 Roller Lever Valve

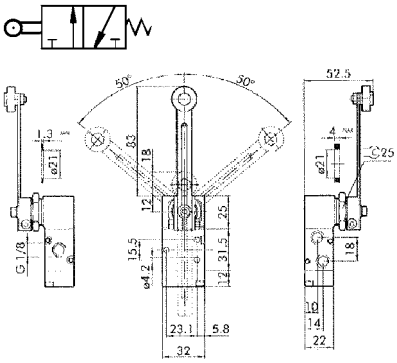

Swing Type G1/8 Ports

9149	Description
7001000900	3/2 G1/8" Ports Spring Return

5/2 Plunger Valve for Manual Actuator

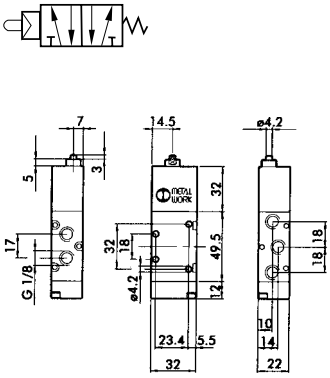

G1/8 Ports

9149	Description
7010001900	5/2 G1/8"

5/2 Roller Lever Valve

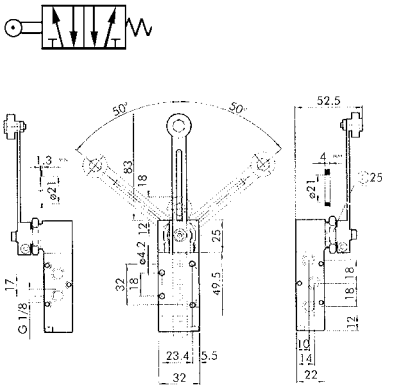

Swing Type G1/8 Ports

9149	Description
7001000910	5/2 G1/8" Ports Spring Return

Adaptor Plate

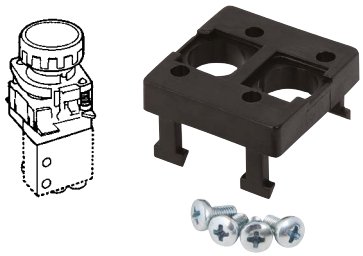

For VME Push Button

9149	Description
0351000050	For Plunger Valves

HAND VALVES

3/2 Push/Pull Valve

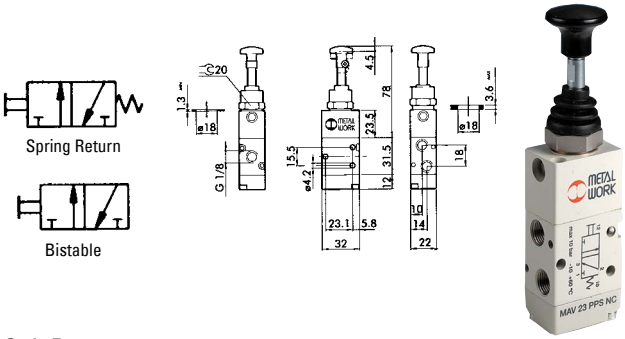

G1/8 Ports

9149	Description
7010001200	3/2 NC Spring Return, G1/8"
7010001300	3/2 NC Bistable, G1/8"

5/2 Push/Pull Valve

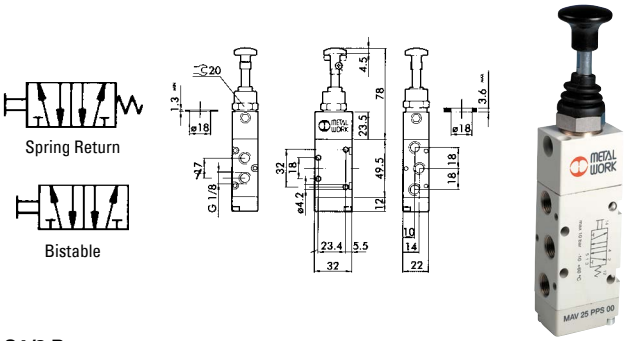

G1/8 Ports

9149	Description
7010001500	5/2 Spring Return, G1/8"
7010001600	5/2 Bistable, G1/8"

3/2 Top Lever Valve

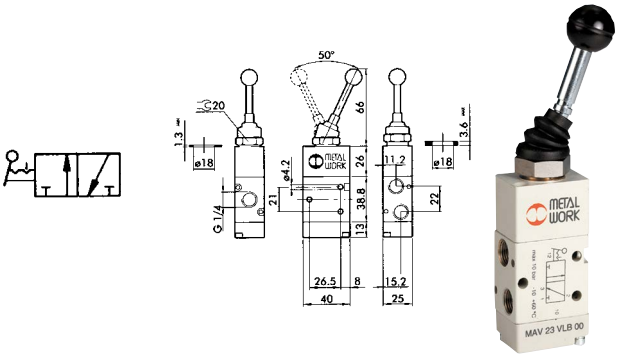

G1/8 Ports

9149	Description
7010001400	3/2 Bistable, G1/8"

3/2 Top Lever Valve

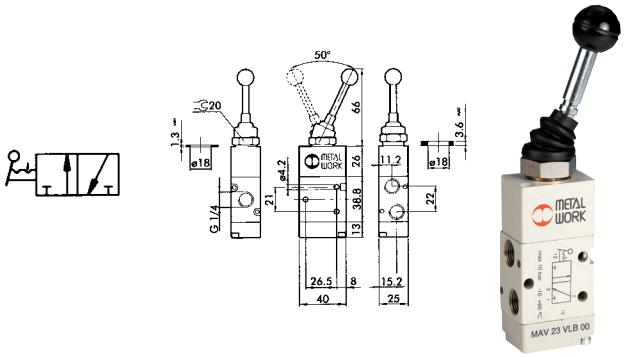

G1/8 Ports

9149	Description
7020001400	3/2 Bistable, G1/4"

5/2 Top Lever Valve

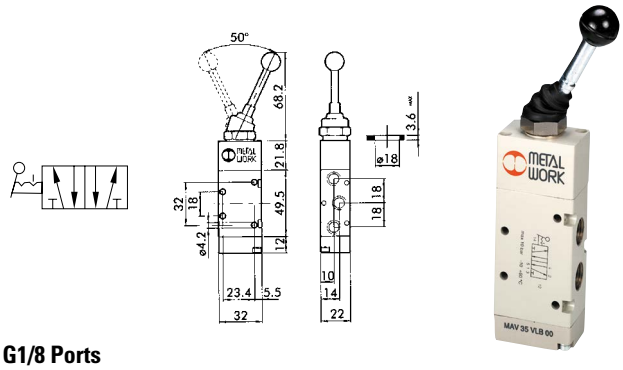

G1/8 Ports

9149	Description
7010001700	5/2 Bistable, G1/8"

5/2 Top Lever Valve

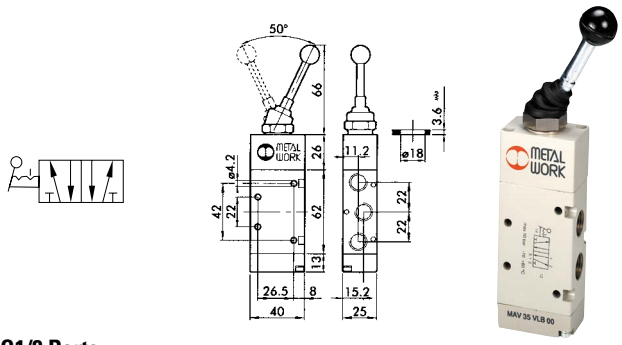

G1/8 Ports

9149	Description
7020001700	5/2 Bistable, G1/4"

HAND VALVES

3/2 Lever Valve, 90º

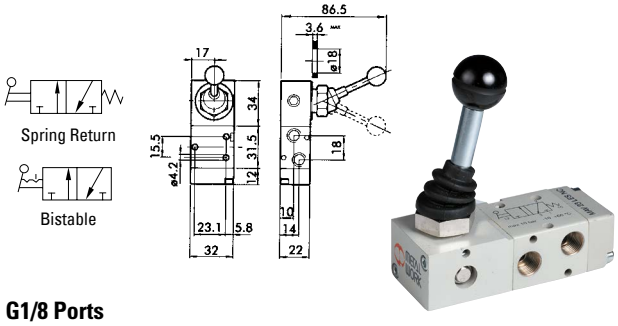

G1/8 Ports

9149	Description
7010000100	3/2 NC Spring Return, G1/8"
7010000200	3/2 Bistable, G1/8"

3/2 Lever Valve, 90º

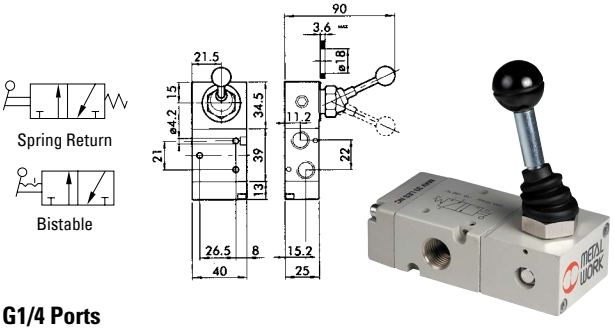

G1/4 Ports

9149	Description
7020000100	3/2 NC Spring Return, G1/4"
7020000200	3/2 Bistable, G1/4"

3/2 Lever Valve, 90º

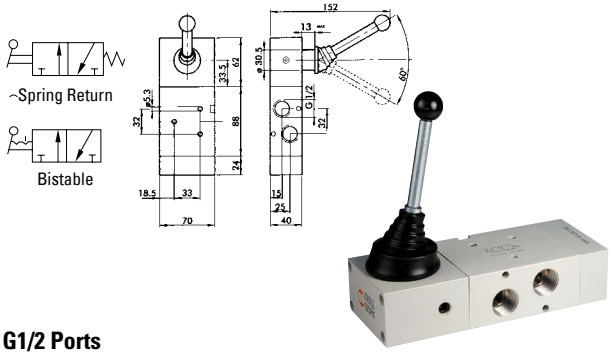

G1/2 Ports

9149	Description
7030000100	3/2 NC Spring Return, G1/2"
7030000200	3/2 Bistable, G1/2"

5/2 Lever Valve, 90º

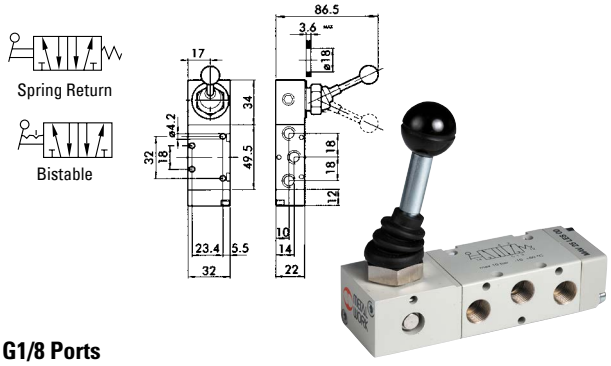

G1/8 Ports

9149	Description
7010000300	5/2 Spring Return, G1/8"
7010000400	5/2 Bistable, G1/8"

5/2 Lever Valve, 90º

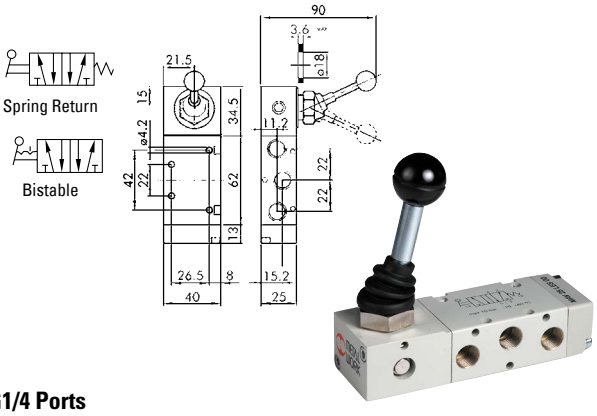

G1/4 Ports

9149	Description
7020000300	5/2 Spring Return, G1/4"
7020000400	5/2 Bistable, G1/4"

5/2 Lever Valve, 90º

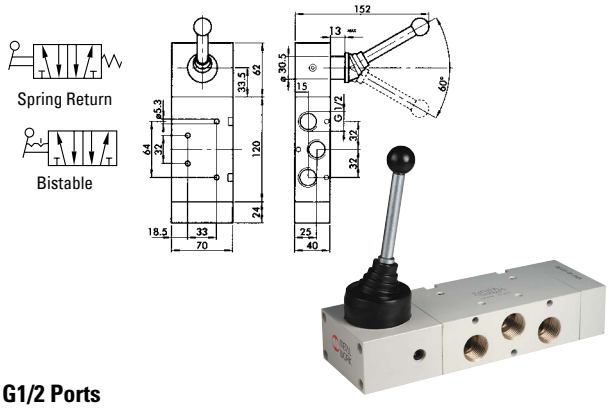

G1/2 Ports

9149	Description
7030000300	5/2 Spring Return, G1/2"
7030000400	5/2 Bistable, G1/2"

HAND VALVES

5/3 Lever Valve, Closed Centres

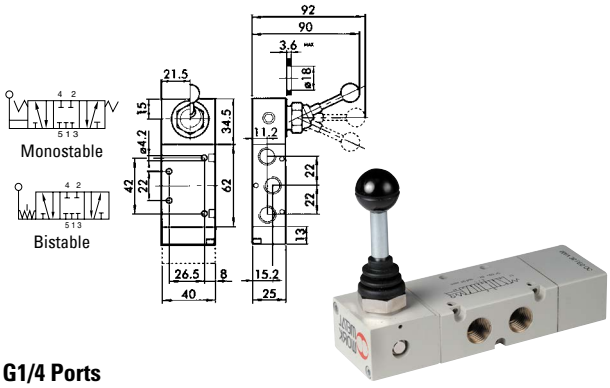

G1/4 Ports

9149	Description
7020001000	5/3 CC Monostable, G1/4"
7020000500	5/3 CC Bistable, G1/4"

5/3 Lever Valve, Closed Centres

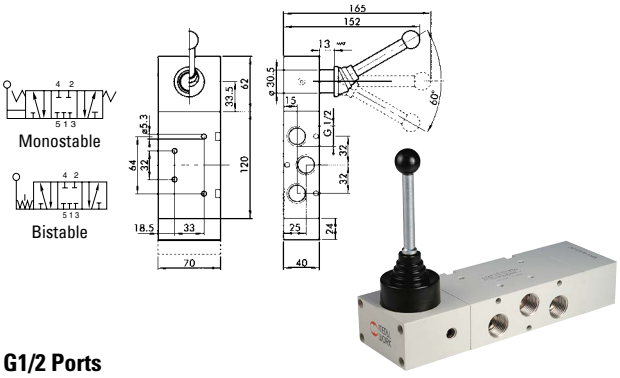

G1/2 Ports

9149	Description
7030001000	5/3 CC Monostable, G1/2"
7030000500	5/3 CC Bistable, G1/2"

5/3 Lever Valve, Open Centres

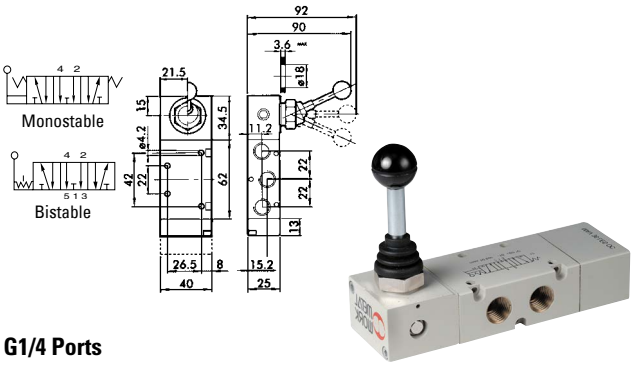

G1/4 Ports

9149	Description
7020000900	5/3 OC Monostable, G1/4"
7020000600	5/3 OC Bistable, G1/4"

5/3 Lever Valve, Open Centres

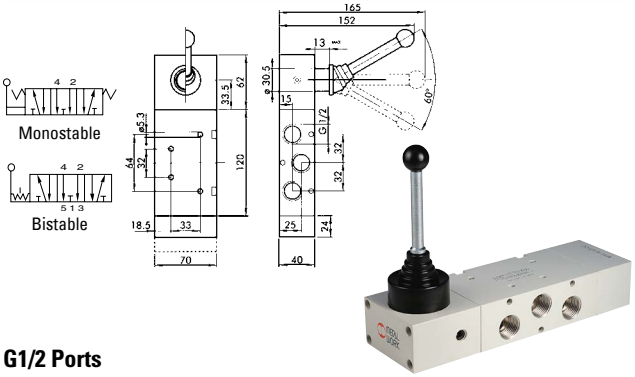

G1/2 Ports

9149	Description
7030000900	5/3 CC Monostable, G1/2"
7030000600	5/3 CC Bistable, G1/2"

5/3 Lever Valve, Pressurised Centres

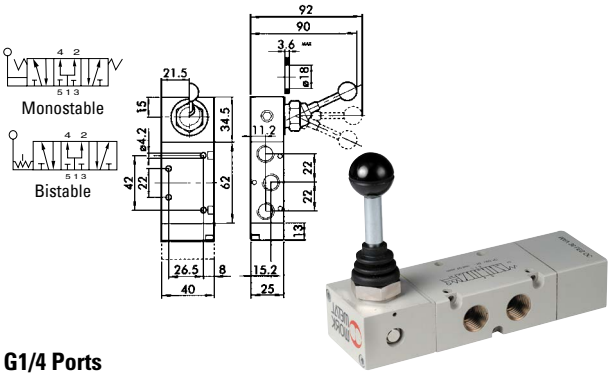

G1/4 Ports

9149	Description
7020001100	5/3 PC Monostable, G1/4"
7020000700	5/3 PC Bistable, G1/4"

5/3 Lever Valve, Pressurised Centres

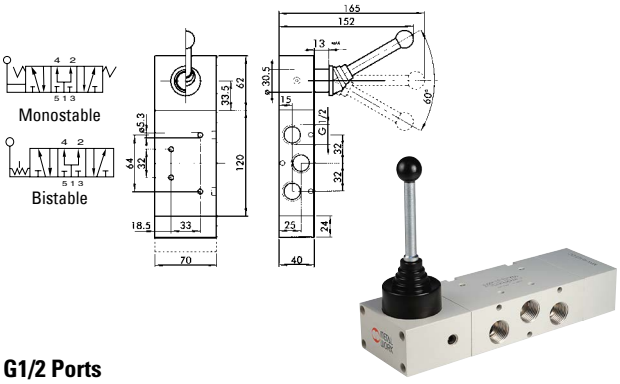

G1/2 Ports

9149	Description
7030001100	5/3 PC Monostable, G1/2"
7030000700	5/3 PC Bistable, G1/2"

PNEUMATICALLY OPERATED VALVES

Pilot Valves

Technical Data	1/8"	1/4"	3/8"	1/2"
Operating Pressure Bar	Vacuum to 10			
Minimum pilot pressure:				
monostable bar	2.5 to 10			
bistable bar	1 to 10			
Operating temperature range	-10°C to +60°C			
Nominal diameter mm	5	7.5	13.3	15
Conductance C Nl/min - bar	121.43	264.26	505.52	971.43
Critical ratio b bar/bar	0.32	0.27	0.32	0.43
Flow rate at 6 bar ΔP 0.5 bar Nl/min	400	750	1560	3200
Flow rate at 6 bar ΔP 1 bar Nl/min	550	1100	2150	4600
TRA / TRR monostable at 6 bar ms	6/15	7/15	5/28	16/46
TRA / TRR bistable at 6 bar ms	7/7	7/7	13/13	16/16

3/2 Pilot/Spring Valve

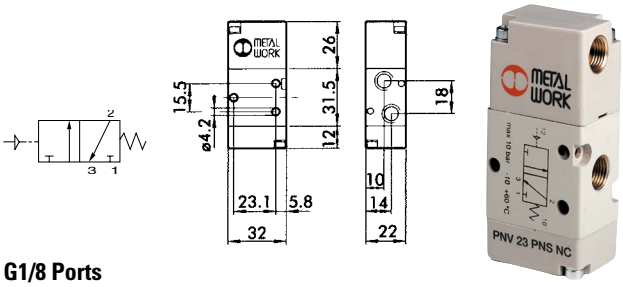

G1/8 Ports

9149	Description
7010010200	3/2 G1/8"

3/2 Pilot/Spring Valve

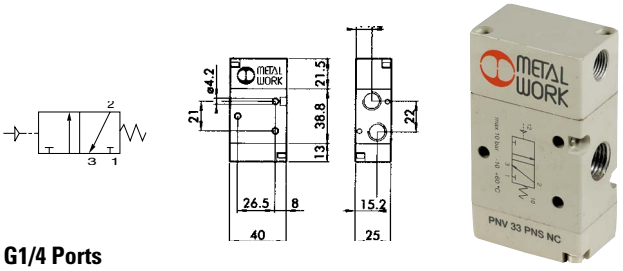

G1/4 Ports

9149	Description
7020010200	3/2 G1/4"

3/2 Pilot/Spring Valve

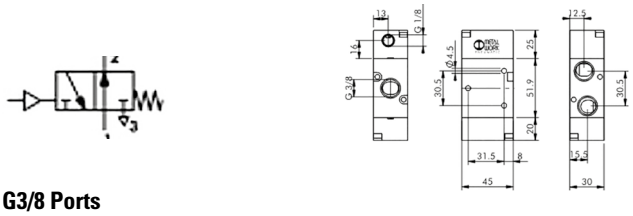

G3/8 Ports

9149	Description
7040010400	3/2 G3/8" NO

3/2 Pilot/Spring Valve, NC

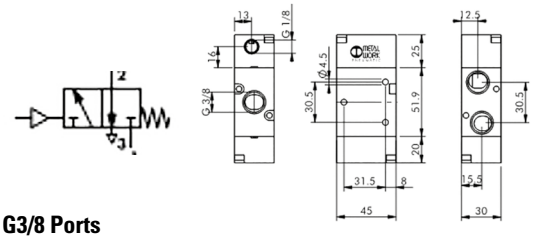

G3/8 Ports

9149	Description
7040010200	3/2 G3/8"

3/2 Pilot/Pilot Valve

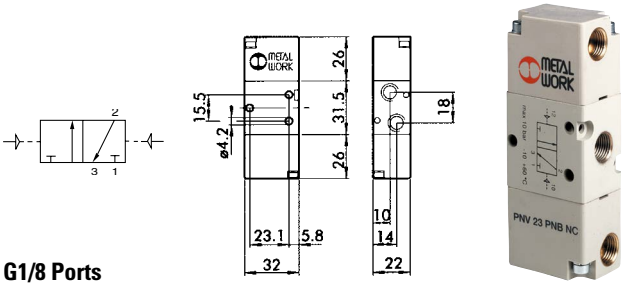

G1/8 Ports

9149	Description
7010010100	3/2 G1/8"

3/2 Pilot/Pilot Valve

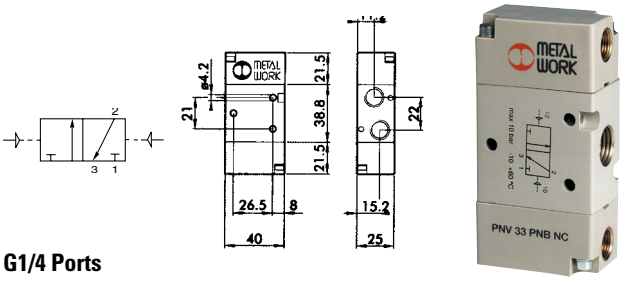

G1/4 Ports

9149	Description
7020010100	3/2 G1/4"

3/2 Pilot/Pilot Valve, NC

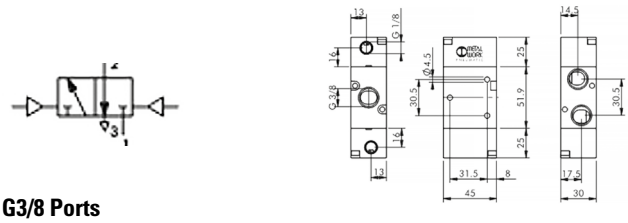

G3/8 Ports

9149	Description
7040010100	3/2 G3/8" NC

PNEUMATICALLY OPERATED VALVES

5/2 Pilot/Spring Valve

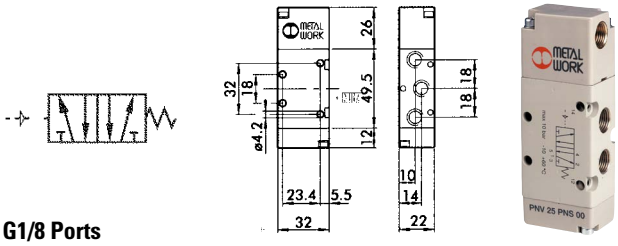

G1/8 Ports

9149	Description
7010011100	5/2 G1/8"

5/2 Pilot/Spring Valve

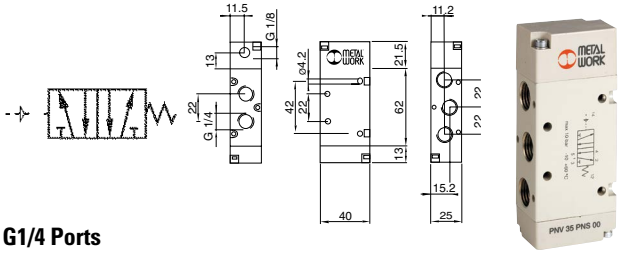

G1/4 Ports

9149	Description
7020011100	5/2 G1/4"

5/2 Pilot/Spring Valve

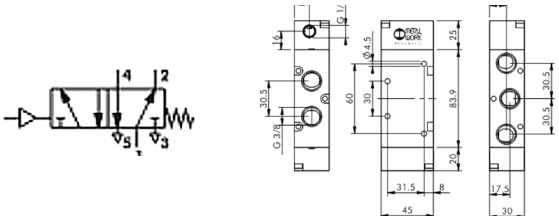

G3/8 Ports

9149	Description
7040011100	5/2 G3/8"

5/2 Pilot/Spring Valve

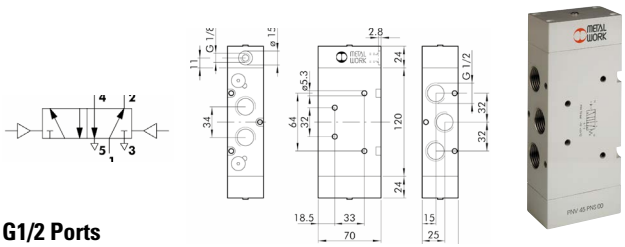

G1/2 Ports

9149	Description
7030011100	5/2 G1/2"

5/2 Pilot/Pilot Valve

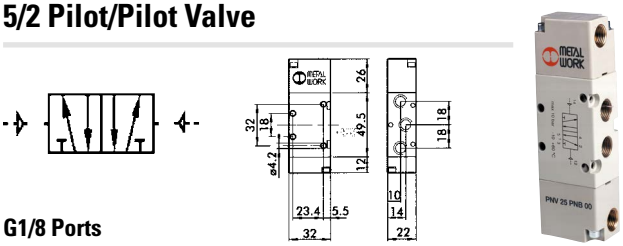

G1/8 Ports

9149	Description
7010011200	5/2 G1/8

5/2 Pilot/Pilot Valve

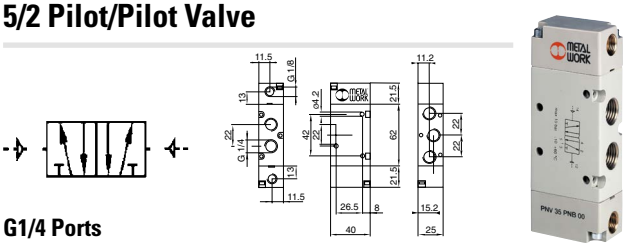

G1/4 Ports

9149	Description
7020011200	5/2 G1/4

5/2 Pilot/Pilot Valve

G3/8 Ports

9149	Description
7040011200	5/2 G3/8"

5/2 Pilot/Pilot Valve

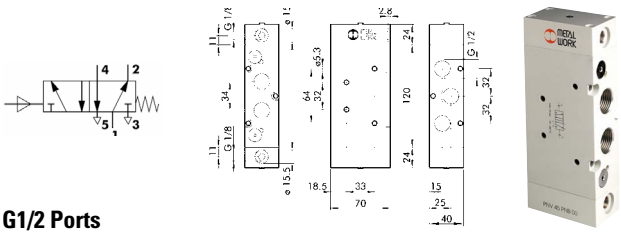

G1/2 Ports

9149	Description
7030011200	5/2 G1/2"

5/2 Pilot/Pilot Valve (Differential)

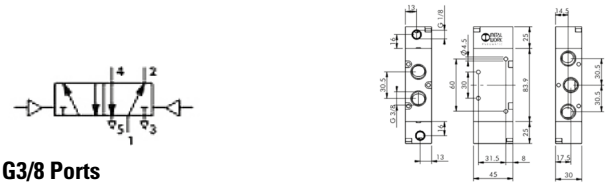

G3/8 Ports

9149	Description
7040011300	5/2 G3/8"

PNEUMATICALLY OPERATED VALVES

5/3 Pilot/Spring/Pilot Valve, CC

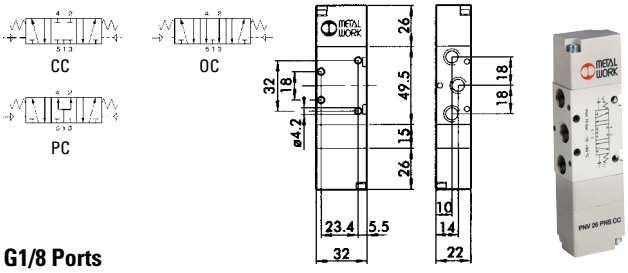

G1/8 Ports

9149	Description
7010012100	5/3 G1/8" CC

5/3 Pilot/Spring/Pilot Valve, OC

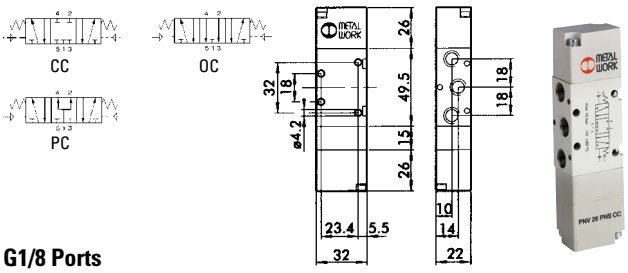

G1/8 Ports

9149	Description
7010012200	5/3 G1/8" OC

5/3 Pilot/Spring/Pilot Valve, CC

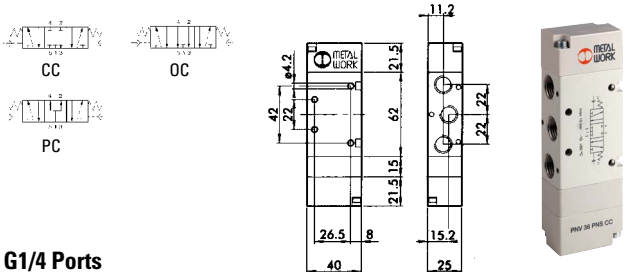

G1/4 Ports

9149	Description
7020012100	5/3 G1/4" CC

5/3 Pilot/Spring/Pilot Valve, OC

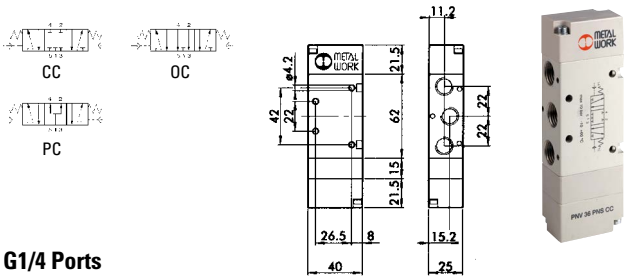

G1/4 Ports

9149	Description
7020012200	5/3 G1/4" OC

5/3 Pilot/Spring/Pilot Valve, CC

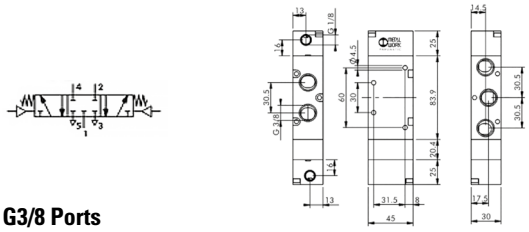

G3/8 Ports

9149	Description
7040012100	5/3 G3/8" CC

5/3 Pilot/Spring/Pilot Valve, OC

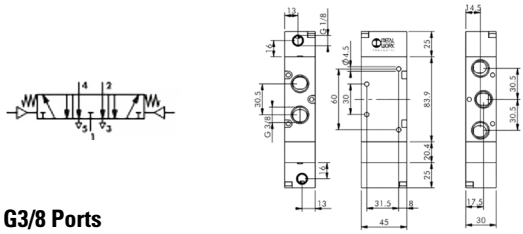

G3/8 Ports

9149	Description
7040012200	5/3 G3/8" OC

5/3 Pilot/Spring/Pilot Valve, CC

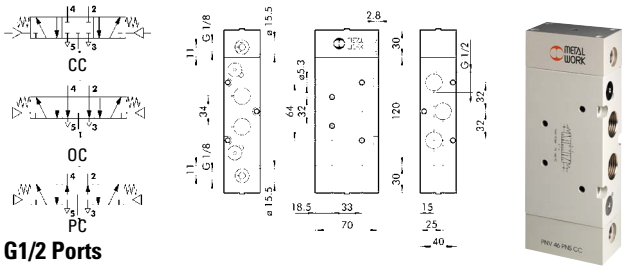

G1/2 Ports

9149	Description
7030012100	5/3 G1/2" CC

5/3 Pilot/Spring/Pilot Valve, OC

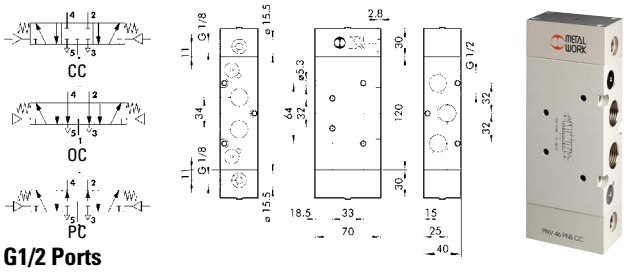

G1/2 Ports

9149	Description
7030012200	5/3 G1/2" OC

PNEUMATICALLY OPERATED VALVES

5/3 Pilot/Spring/Pilot Valve, PC

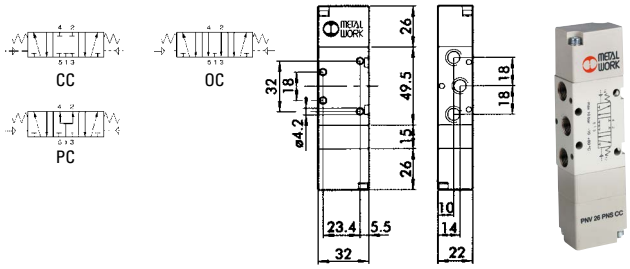

G1/8 Ports

9149	Description
7010012300	5/3 G1/8" PC

5/3 Pilot/Spring/Pilot Valve, PC

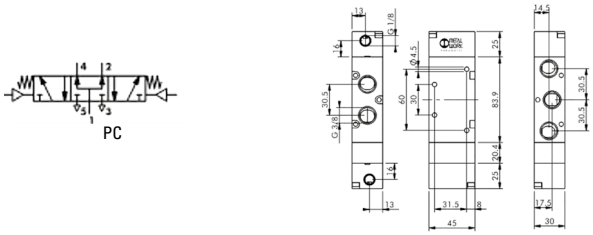

G3/8 Ports

9149	Description
7040012300	5/3 G3/8" PC

5/3 Pilot Valve, PC

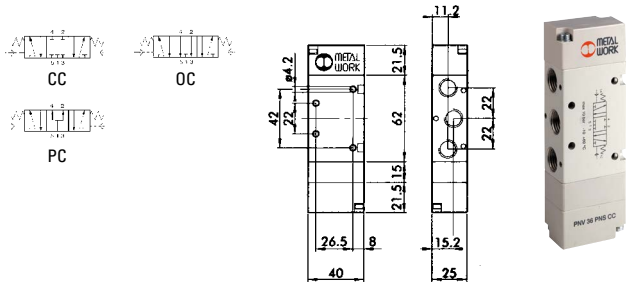

G1/4 Ports

9149	Description
7020012300	5/3 G1/4" PC

5/3 Pilot/Spring/Pilot Valve, PC

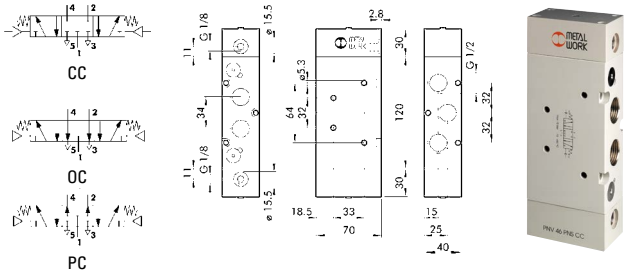

G1/2 Ports

9149	Description
7030012300	5/3 G1/2" PC

For **Silencers**
see **Industrial Section 2**

SOLENOID CONTROL VALVES

Solenoid Valves

Technical Data	1/8"	1/4"	3/8"	1/2"	Namur
Operating pressure:					
monostable bar	2.5 to 10				
bistable bar	1 to 10				
external pilot assisted bar	Vacuum to 10				
Minimum pilot pressure bar	2.5				
Operating temperature range	-10°C to +60°C				
Nominal diameter mm	5	7.5	13.3	15	7.5
Conductance C Nl/min - bar	121.43	264.26	505.52	971.43	264.26
Critical ratio b bar/bar	0.32	0.27	0.32	0.43	0.27
Flow rate at 6 bar ΔP 0.5 bar Nl/min	400	750	1560	3200	750
Flow rate at 6 bar ΔP 1 bar Nl/min	550	1100	2150	4600	1100
TRA / TRR monostable at 6 bar ms	15/35	19/45	21/72	36/60	7/15
TRA / TRR bistable at 6 bar ms	20/20	21/21	18/18	30/30	7/7
Coil voltage values	12; 24 VDC – 24; 110; 220 V AC 50/60Hz				
Power	2 W (DC) 3.5VA (AC)				
Voltage tolerance %	-10 to +15				
Insulation class	F 155				

Namur Interface Solenoid/Spring Valve

G1/4 Ports

9149	Description
7021020100	Single Solenoid 5/2 G1/4"

Namur Interface Solenoid/Solenoid Valve

G1/4 Ports

9149	Description
7021020200	Double Solenoid 5/2 G1/4"

3/2 Solenoid/Spring Valve, Normally Open

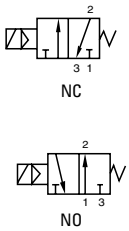

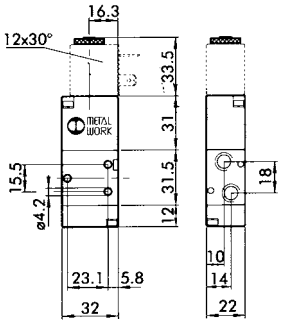

G1/8 Ports

9149	Description
7010020400	3/2 G1/8" NO

3/2 Solenoid/Spring Valve, Normally Open

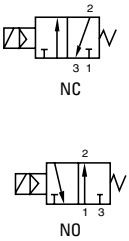

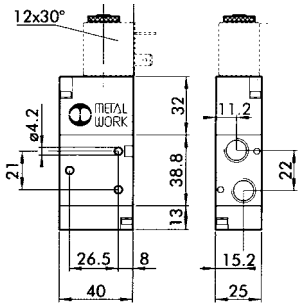

G1/4 Ports

9149	Description
7020020400	3/2 G1/4" NO

3/2 Solenoid/Spring Valve, Normally Open

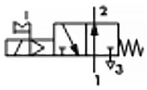

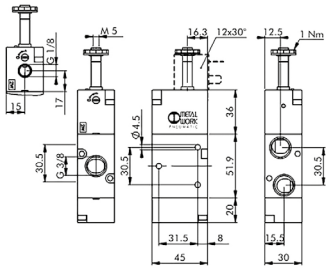

G3/8 Ports

9149	Description
7040020400	3/2 G3/8" NO

3/2 Solenoid/Spring Valve, Normally Open

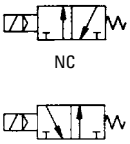

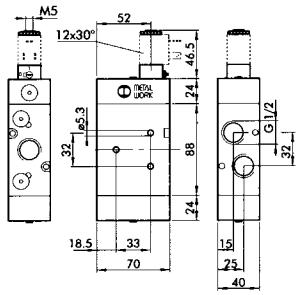

G1/2 Ports

9149	Description
7030020400	3/2 G1/2" NO Spring

For **Solenoid Plugs** see page **102**

SOLENOID CONTROL VALVES

3/2 Solenoid/Spring Valve, Normally Closed

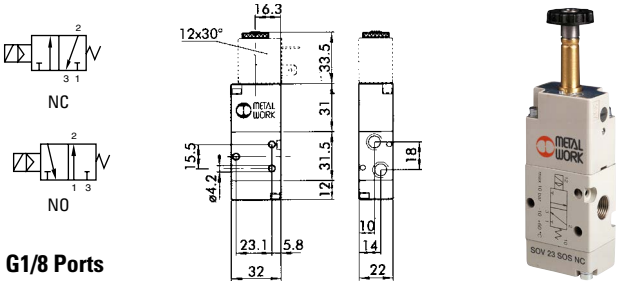

G1/8 Ports

9149	Description
7010020200	3/2 G1/8" NC

3/2 Solenoid/Spring Valve, Normally Closed

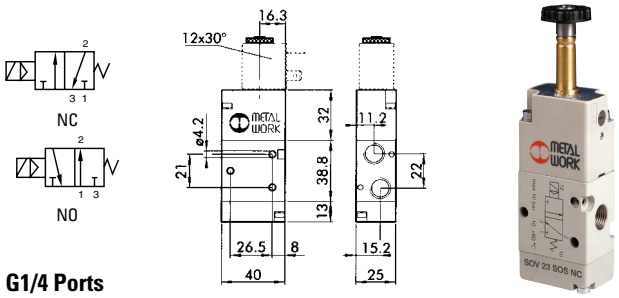

G1/4 Ports

9149	Description
7020020200	3/2 G1/4" NC

3/2 Solenoid/Spring Valve, Normally Closed

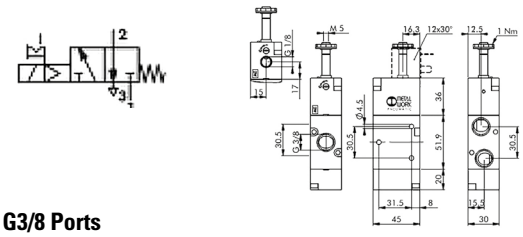

G3/8 Ports

9149	Description
7040020200	3/2 G3/8" NC

3/2 Solenoid/Spring Valve, Normally Closed

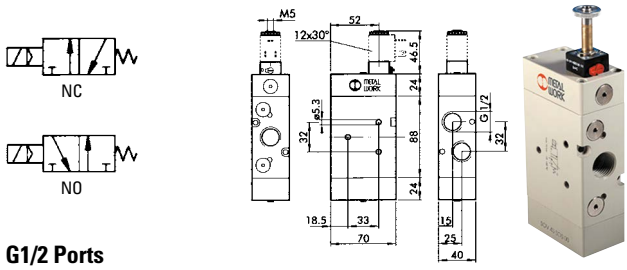

G1/2 Ports

9149	Description
7030020200	3/2 G1/2 NC Spring

3/2 Solenoid/Spring Valve, Normally Open Assisted

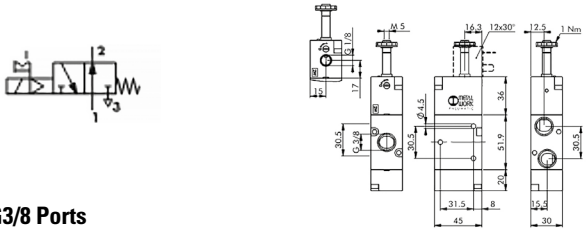

G3/8 Ports

9149	Description
7040020600	3/2 G3/8" NO ASS

3/2 Solenoid/Spring Valve, Normally Closed Assisted

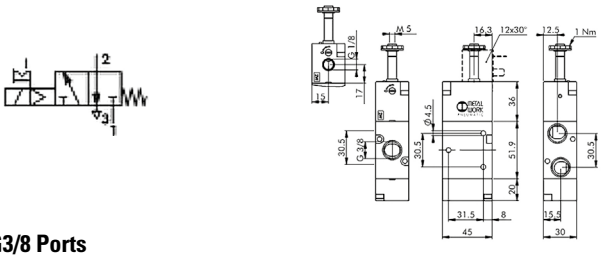

G3/8 Ports

9149	Description
7040020500	3/2 G3/8" NC ASS

3/2 Solenoid/Solenoid Valve, Normally Closed

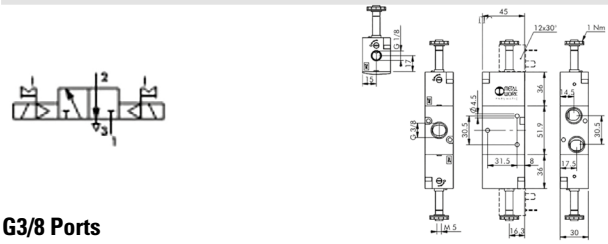

G3/8 Ports

9149	Description
7040020100	3/2 G3/8" NC

3/2 Solenoid/ Solenoid Valve, Normally Closed Assisted

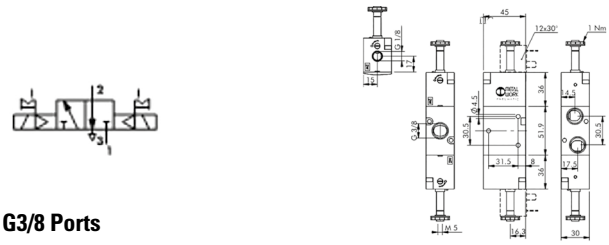

G3/8 Ports

9149	Description
7040020300	3/2 G3/8" ASS

SOLENOID CONTROL VALVES

5/2 Solenoid/Spring Valve

Note: solenoid coils must be ordered separately.

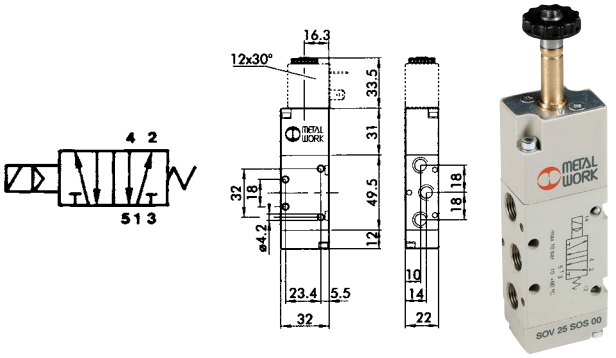

G1/8 Ports

9149	Description
7010021100	5/2 G1/8"

5/2 Solenoid/Spring Valve

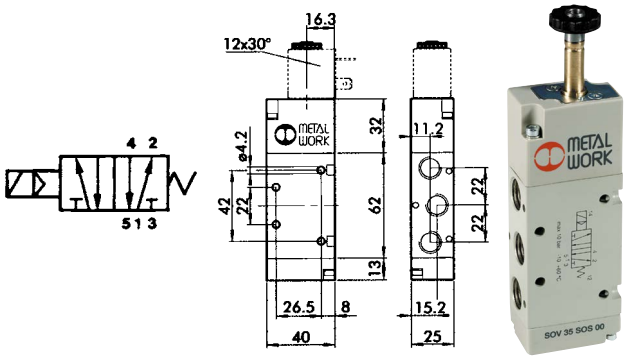

G1/4 Ports

9149	Description
7020021100	5/2 G1/4"

5/2 Solenoid/Spring Valve

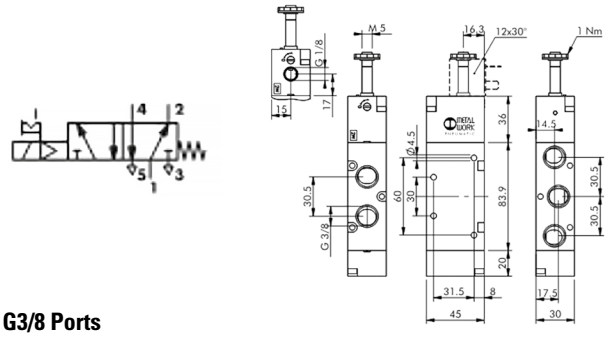

G3/8 Ports

9149	Description
7040021100	5/2 G3/8"

5/2 Solenoid/Spring Valve

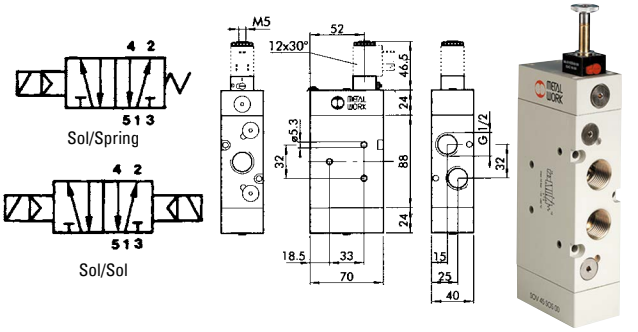

G1/2 Ports

9149	Description
7030021100	5/2 G1/2" Sol/Spring

5/2 Solenoid/Spring Valve, Assisted

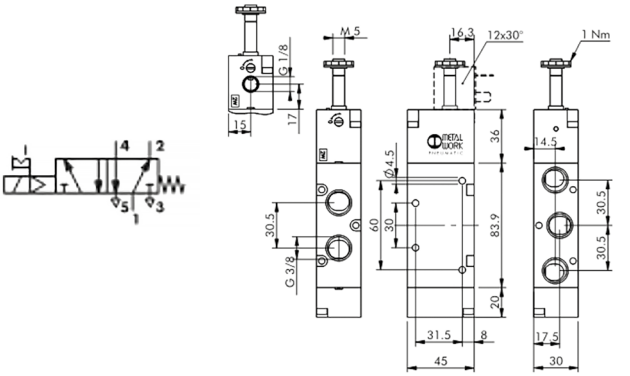

G3/8 Ports

9149	Description
7040021500	5/2 G3/8" ASS

SOLENOID CONTROL VALVES

5/2 Solenoid/Solenoid Valve

Note: solenoid coils must be ordered separately.

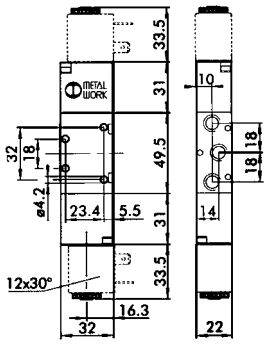

G1/8 Ports

9149	Description
7010021200	5/2 G1/8"

5/2 Solenoid/Solenoid Valve

Sol/Spring

Sol/Sol

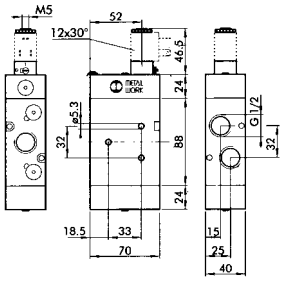

G1/2 Ports

9149	Description
7030021200	5/2 G1/2" Sol/Sol

5/2 Solenoid/Solenoid Valve

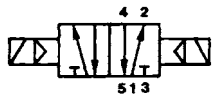

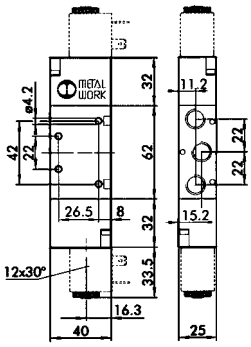

G1/4 Ports

9149	Description
7020021200	5/2"G1/4"

5/2 Solenoid/Solenoid Valve, Differential

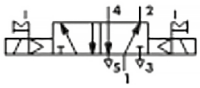

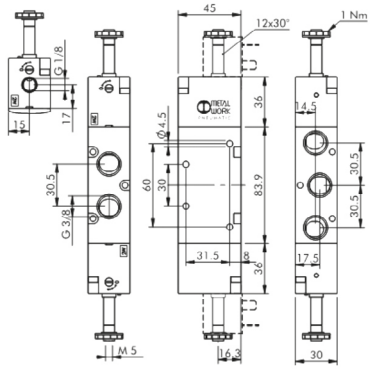

G3/8 Ports

9149	Description
7040021300	5/2 G3/8"

5/2 Solenoid/Solenoid Valve

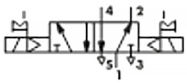

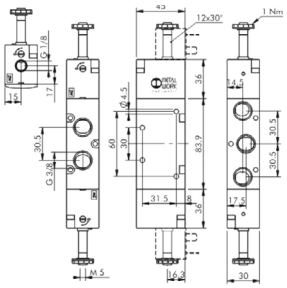

G3/8 Ports

9149	Description
7040021200	5/2 G3/8"

5/2 Solenoid/Solenoid Valve, Assisted

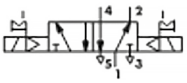

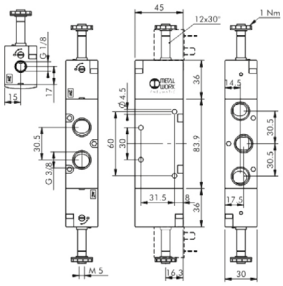

G3/8 Ports

9149	Description
7040021600	5/2 G3/8" ASS

SOLENOID CONTROL VALVES

5/3 Solenoid/Spring/Solenoid Valve, Pressure Centres

Technical Data
- Nominal diameter: 7.5mm
- Flow rate at 6 bar Δ P 0.5 bar: 750 Nl/min
- Flow rate at 6 bar Δ P 1 bar: 1100 Nl/min
- **Note: solenoid coils must be ordered separately.**

Operating Temperature Range: 10ºC to +60ºC

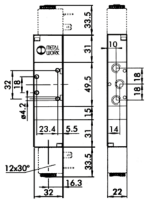

G1/8 Ports

9149	Description
7010022300	5/3 G1/8" PC

5/3 Solenoid/Spring/Solenoid Valve, Pressure Centres

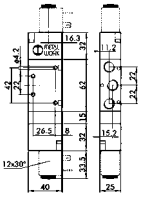
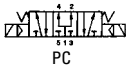
PC

G1/4 Ports

9149	Description
7020022300	5/3 G1/4" PC

5/3 Solenoid/Spring/Solenoid Valve, Pressure Centres

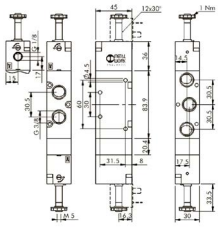
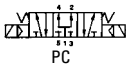
PC

Body only

G3/8 Ports

9149	Description
7040022300	5/3 G3/8" PC

5/3 Solenoid/Spring/Solenoid Valve, Closed Centres

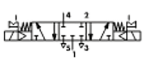
CC

G3/8 Ports

9149	Description
7040022100	5/3 G3/8" CC

5/3 Solenoid/Spring/Solenoid Valve, Pressure Centres

Technical Data
- Monostable solenoid/spring: 2.5 bar to 10 bar
- Bistable solenoid/solenoid: 1 to 10 bar
- Nominal diameter: 15mm
- Flow rate at 6 bar ΔP 1 bar: 4600Nl/min
- Absorbed power: 2W (DC) 3VA (AC)
- Voltages tolerances: -10ºC to +15ºC
- Degree of protection: IP65 - DIN 40050
- Solenoid rating: 100% ED

Operating Temperature Range: -10ºC to +60ºC

Maximum Temperature at 100% Solenoid rating: +70ºC at +20ºC ambient

Minimum Actuation Pressure: 2.5 bar

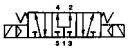
PC

CC

G1/2 Ports

9149	Description
7030022300	G1/2" PC Solenoid

5/3 Solenoid/Spring/ Solenoid Valve, Closed Centres

G1/2 Ports

9149	Description
7030022100	G1/2" CC Solenoid

5/3 Solenoid/Spring/Solenoid Valve, Closed Centres

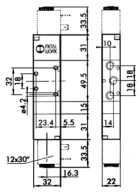

G1/8 Ports

9149	Description
7010022100	5/3 G1/8" CC

5/3 Solenoid/Spring/Solenoid Valve, Closed Centres

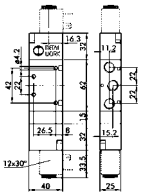

G1/4 Ports

9149	Description
7020022100	5/3 G1/4" CC

SOLENOID CONTROL VALVES

5/3 Solenoid/Spring/Solenoid Valve, Open Centres

Technical Data
- Nominal diameter: 7.5mm
- Flow rate at 6 bar Δ P 0.5 bar: 750 Nl/min
- Flow rate at 6 bar Δ P 1 bar: 1100 Nl/min
- **Note: solenoid coils must be ordered separately.**

Operating Temperature range: -10ºC to +60ºC

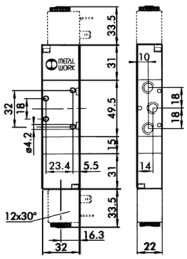

G1/8 Ports

9149	Description
7010022200	5/3 G1/8" OC

5/3 Solenoid/Spring/Solenoid Valve, Open Centres

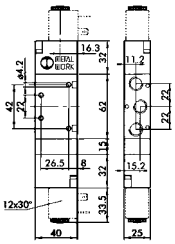

G1/4 Ports

9149	Description
7020022200	5/3 G1/4" OC

5/3 Solenoid/Spring/Solenoid Valve, Open Centres

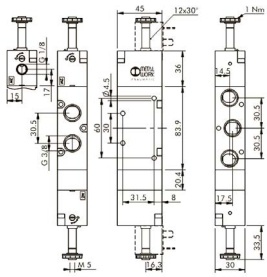

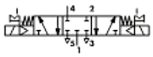

G3/8 Ports

9149	Description
7040022200	5/3 G3/8" OC

5/3 Solenoid/Spring/Solenoid Valve,Open Centres

Technical Data
- Monostable solenoid/spring: 2.5 bar to 10 bar
- Bistable solenoid/solenoid: 1 to 10 bar
- Nominal diameter: 15mm
- Flow rate at 6 bar ΔP 1 bar: 4600Nl/min
- Absorbed power: 2W (DC) 3VA (AC)
- Voltages tolerances: -10ºC to +15ºC
- Degree of protection: IP65 - DIN 40050
- Solenoid rating: 100% ED

Operating Temperature Range: -10ºC to +60ºC

Maximum Temperature at 100% Solenoid rating: +70ºC at +20ºC ambient

Minimum Actuation Pressure: 2.5 bar

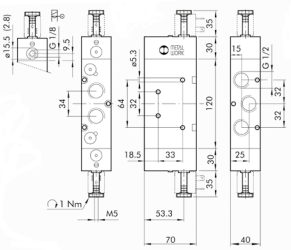

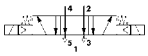

G1/2 Ports

9149	Description
7030022200	G1/2" OC Solenoid

5/3 Solenoid/Spring/Solenoid Valve, Pressure Centres Assisted

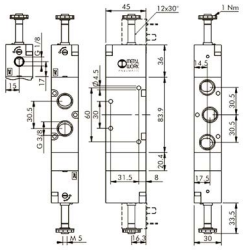

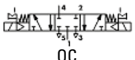

G3/8 Ports

9149	Description
7040022600	5/3 G3/8" PC ASS

5/3 Solenoid/Spring/Solenoid Valve, Closed Centres Assisted

G3/8 Ports

9149	Description
7040022400	5/3 G3/8" CC ASS

5/3 Solenoid/Spring/Solenoid Valve, Open Centres Assisted

G3/8 Ports

9149	Description
7040022500	5/3 G3/8" OC ASS

SOLENOID CONTROL VALVES

Solenoid Coils for ISO 5599 Valves, Size 1

Technical Data
- Voltage tolerances: -10% to +15%
- Insulation class: F155
- Degree of protection: IP65 -DIN 40050
- Solenoid rating: 100%
- Electric contact: AMP DIN 43650 2 contacts + 1 earth

Operating Temperature Range:
-20ºC to +120ºC

Maximum Temperature at 100% Solenoid Rating:
+70ºC at +20ºC ambient temperature

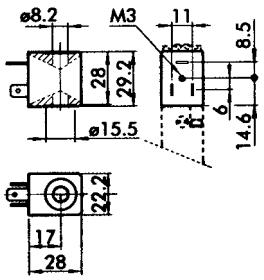

22mm

9182	Nominal Voltage	Power Inrush	Input Holding	Type
W0215000101	24V DC	2W	2W	22 Ø8 BA 2W-24V DC
W0215000111	24V 50/60Hz	4VA	3VA	22 Ø8 BA 3V-24V AC
W0215000121	110V 50/60Hz	4VA	2W	22 Ø8 BA 3VA-110V AC
W0215000131	220V 50/60Hz	4VA	2W	22 Ø8 3VA-220V AC

Solenoid Coils, 5W

Technical Data
- Monostable solenoid/spring: 2.5 bar to 10 bar
- Bistable solenoid/solenoid: 1 to 10 bar
- Nominal diameter: 15mm
- Flow rate at 6 bar ΔP 1 bar: 4600Nl/min
- Absorbed power: 2W (DC) 3VA (AC)
- Voltages tolerances: -10ºC to +15ºC
- Degree of protection: IP65 - DIN 40050
- Solenoid rating: 100% ED
- **Note: solenoid coils must be ordered separately.**

Operating Temperature Range:
-10ºC to +60ºC

Maximum Temperature at 100% Solenoid Rating:
+70ºC at +20ºC ambient temperature

Minimum Actuation Pressure:
2.5 bar

22mm

9182	Nominal Voltage	Power Inrush	Input Holding	Type
W0215000001	24V DC	5W	5W	22 Ø8 5W-24V DC
W0215000011	24V 50/60Hz	8VA	5VA	22 Ø8 5VA-24V AC
W0215000021	110V 50/60Hz	8VA	5VA	22 Ø8 5VA-110V AC
W0215000031	220V 50/60Hz	8VA	5VA	22 Ø8 5W-220V AC

Solenoid Coil Connector

22mm

9072	Description
M1NS2000	Form B Socket Connector

Manifolds

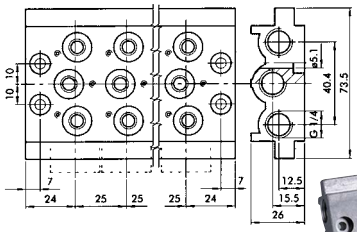

G1/8" Ports

In-line, 1/8" Ports

9149	Description
0223000201	2 Position
0223000301	3 Position
0223000401	4 Position
0223000501	5 Position
0223000601	6 Position
0223000701	7 Position
0226004500	Blanking Plate Size 1/8"

Manifolds

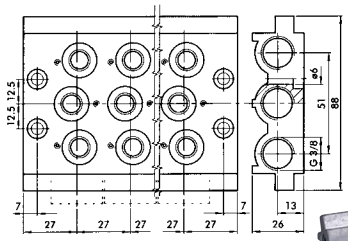

G1/4" Ports

In-line, 1/4" Ports

9149	Description
0224000201	2 Position
0224000401	4 Position
0224000501	5 Position
0224000601	6 Position
0224000701	7 Position
0226004500	Blanking Plate Size 1/8"
0226005500	Blanking Plate Size 1/4"

ISO VALVES

Technical Data

ISO Size	Operating Pressure	Operating Temperature Range	Nominal Diameter	Flow Rate at 6 bar ΔP 0.5 bar	Flow Rate at 6 bar ΔP 1 bar
1	Vacuum ÷≥10 bar	-10ºC to 60ºC≥	7.5mm	700 Nl/min	1100 Nl/min
2			12mm	1800 Nl/min	2700 Nl/min

Pneumatic ISO 5599 Valves

ISO size 1.

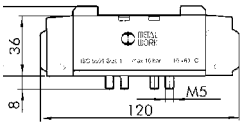

5/2 Pilot/Spring

9149	ISO Size
7051011100	1
7052011100	2

Pneumatic ISO 5599 Valves

5/2 Pilot/Pilot

9149	ISO Size
7051011200	1
7052011200	2

Pneumatic ISO 5599 Valves

ISO size 2.

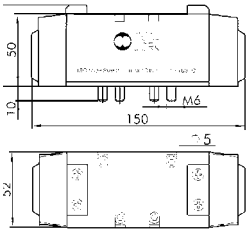

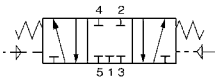

5/3 Pilot/Pilot Closed Centres

9149	ISO Size
7051012100	1
7052012100	2

Pneumatic ISO 5599 Valves

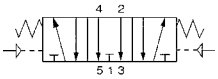

5/3 Pilot/Pilot Open Centres

9149	ISO Size
7051012200	1
7052012200	2

Pneumatic ISO 5599 Valves

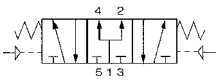

5/3 Pilot/Pilot Pressurised Centres

9149	ISO Size
7051012300	1
7052012300	2

ISO VALVES

Technical Data

ISO Size	Operating Pressure	Operating Temperature Range	Nominal Diameter	Flow Rate at 6 bar ΔP 0.5 bar	Flow Rate at 6 bar ΔP 1 bar
1	2.5 ÷≥10 bar	-10ºC to 60ºC≥	7.5mm	700 Nl/min	1100 Nl/min
2			12mm	1800 Nl/min	2700 Nl/min

Solenoid ISO 5599 Valves

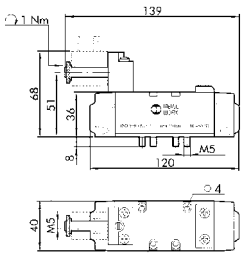

ISO size 1.

5/2 Solenoid/Spring

9149	ISO Size
7051021100	1
7052021100	2

Solenoid ISO 5599 Valves

5/2 Solenoid/Solenoid

9149	ISO Size
7051021200	1
7052021200	2

For **Coils and Plugs** see page **106**

Solenoid ISO 5599 Valves

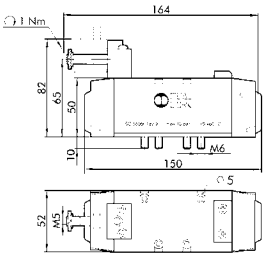

ISO size 2.

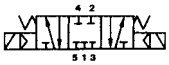

5/2 Solenoid/Solenoid Closed Centres

9149	ISO Size
7051022100	1
7052022100	2

Solenoid ISO 5599 Valves

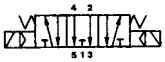

5/2 Solenoid/Solenoid Open Centres

9149	ISO Size
7051022200	1
7052022200	2

Solenoid ISO 5599 Valves

5/3 Solenoid/Solenoid Pressurised Centres

9149	ISO Size
7051022300	1
7052022300	2

Safe Air Series Solenoid Spring Valves ISO 5599/1

- Nominal Diameter 7.5
- Flow Rate at 6 bar Δp 0.5 bar 700 NI/min
- Flow rate at 6 bar Δp 1bar 1100 NI/min

Operating Temperature Range:
-10°C to 60°C

Operating Pressure:
2.5 to 10 bar

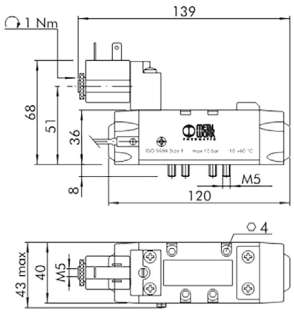

ISO 1, 2.5 Metre, 3 Wires

9149	Description
7057021100	Solenoid/Spring
7057021400	Solenoid/Spring Pilot

Safe Air Series Solenoid Spring Valves ISO 5599/1

- Nominal Diameter 12
- Flow Rate at 6 bar Δp 0.5 bar 1800 NI/min
- Flow Rate at 6 bar Δp 1bar 2700 NI/min

Operating Temperature Range:
-10°C to 60°C

Operating Pressure:
2.5 to 10 bar

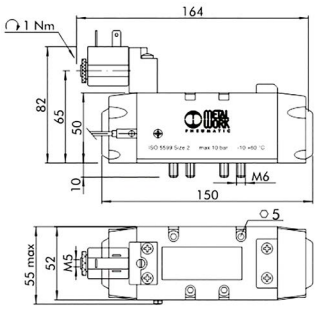

ISO 2, 2.5 ISO 1, 2.5 Metre, 3 Wires

9149	Description
7058021100	Solenoid/Spring
7058021400	Solenoid/Spring Pilot

Safe Air Series Solenoid Spring Valves ISO 5599/1

- Nominal Diameter 15
- Flow Rate at 6 bar Δp 0.5 bar 3200 NI/min
- Flow Rate at 6 bar Δp 1bar 4600 NI/min

Operating Temperature Range:
-10°C to 60°C

Operating Pressure:
2.5 to 10 bar

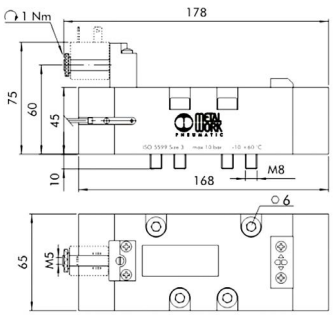

ISO 3, 2.5 Metre, 3 Wires

9149	Description
7059021100	Solenoid/Spring
7059021400	Solenoid/Spring Pilot

ACCESSORIES FOR ISO VALVES

Solenoid Coils for ISO 5599 Valves, Size 1

Technical Data

- Voltage tolerance: -10% to +15%
- Insulation class: F155
- Degree of protection: IP65 EN60529 with connector
- Avoid prolonged exposure to atmospheric agents
- Coil temperature range, 100% ED: +20ºC to +70ºC (ambient temperature)

22mm

9182	Description
W0215000101	24V DC
W0215000111	24V AC
W0215000121	110V AC
W0215000131	220V AC

9072	Description
M1NS2000	Form B Socket Connector

Solenoid Coils for ISO 5599 Valves, Size 2

30mm

9182	Description
W0210010100	24V DC
W0210011100	24V AC
W0210012100	110V AC
W0210013100	220V AC

9072	Description
G1NU2000	Form A Socket Connector

Sub-bases

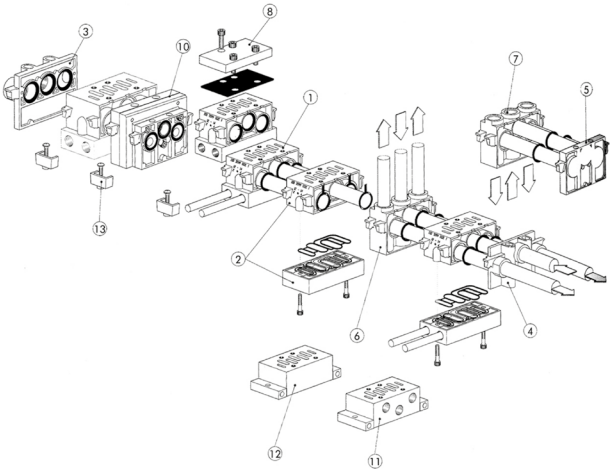

For ISO 5599 Valves, Size 1

9149	Description
0228000150	1) Manifold Base, Side Ports
0228000155	2) Manifold Base, Bottom Ports
0228000200	3) Input End Plate
0228000210	5) Blind End Plate
0228000300	6) Intermediate Plate, Top Ports
0228000301	7) Intermediate Plate, Back Ports
0228000500	8) Blanking Plate
0228000400	9) Intermediate Diaphragm
0228000100	11:) Individual Base, Side Ports
0228000700	13) Assembly Kit

For ISO 5599 Valves, Size 2

9149	Description
0228001150	1) Manifold Base, Side Ports
0228001155	2) Manifold Base, Bottom Ports
0228001200	3) Input End Plate
0228001210	5) Blind End Plate
0228001300	6) Intermediate Plate, Top Ports
0228001301	7) Intermediate Plate, Back Ports
0228001500	8) Blanking Plate
0228001400	9) Intermediate Diaphragm
0228001100	11) Individual Base, Side Ports
0228001700	13) Assembly Kit

PNEUMATIC LOGIC VALVES

Introduction

Logic elements are available with five different functions:
OR, AND, NOT, YES, MEMORY.
Main features common to all elements:
Adaptor for DIN rail bar (DIN EN 50022) integral with the body
Built-in pressure indicator
Pipe locking system using Ø 4 built-in fittings

Technical Specifications

- Nominal diameter: 2.7mm
- Flow rate at 6 bar P 1 bar: 100 Nl/min
- Reset:
  AND, OR via compressed air
  YES, NOT via mechanical spring

Operating Temperature Range:
-10°C to 60°C

Pressure Range:
YES, MEMORY, OR, AND from 0 to 8 bar pilot pressure from 1.5 to 8 bar
NOT from 0.4 to 6 bar

Logic Element

OR

9149	Description
W3604000001	Function 4mm Fittings

AND

9149	Description
W3604000002	Function 4mm Fittings

NOT

9149	Description
W3604000003	Function 4mm Fittings

YES

9149	Description
W3604000004	Function 4mm Fittings

MEMORY

9149	Description
W3604000005	Function 4mm Fittings

Technical Specifications

Delay setting range: from 0 to 30, at 6 bar
Signal shut off time: <0.1s

Timer

9149	Description
W3604000006	Timer with 4mm Fittings

MULTIMACH VALVE SYSTEM

HDM is the ideal solution for those requiring the unbeatable performance, flexibility and modularity of Multimach valves combined with sturdy mechanics and a high degree of protection against external agents. Each valve is enclosed in a reinforced technopolymer protective shell that acts as a shock absorber and prevents the infiltration of dirt.

The class of protection is IP65. The smooth, rounded design makes HDM ideal for applications requiring frequent washing without the deposit of residues. All the pneumatic connections are on one side, with built-in push-in fittings. The user interface is on another side so the fitter and service engineer have everything at hand.

Flexibility is total: there are 1-16 valves, input and output terminals for pipes of different sizes and intermediate modules for separate inputs and outputs. One very important new feature is that valves of different capacities can be mounted as required. Three different valve sizes can be combined at will. This means a valve can be replaced at any time by another one offering a different performance. It only takes a few seconds to replace or add a valve. To do this, merely loosen the two grub screws fixing the valve to the adjacent ones.

Since the electrical signal is relayed from one valve to the next by means of gold-plated contacts connected to an electronic board, the electrical connections are entirely automatic.

The ratio of the HDM's flow rate to its dimensions are unrivalled – miniaturisation and efficiency have reached a peak.

Technical Data

Valve Port Connections	**Quick connection ports 2 and 4, Ø 4, 6, 8mm**		**Threaded exhaust port 3/8" or fitting Ø 8mm**
Connection for Supply of Pilots	Automatic fitting on end plate, Ø 4		
Maximum Number of Pilots	16		
Maximum Number of Valves	16 (same as the max. no. of pilots)		
Operating Temperature Range	-10ºC to ÷≤+60ºC		
Fluid Rate 6 bar ΔP 1 bar	11mm Ø 4 = 200 Nl/min	11mm Ø 6 = 500 Nl/min	14mm Ø 8 = 800 Nl/min
Pressure Range	X (pilot supply)		1-11 (valve supply)
	Terminal 1-11	2 ÷ 7 bar	Vacuum at 10 bar
	Terminal 1		2 ÷ 7 bar
Voltage Range	24V DC ± 10%		
Power	0.6W		
Control	PNP o NPN		
Insulation Class	F155		
Degree of Protection	IP65 with common outlets		
Solenoid Rating	100% ED		

Components

1) Exhaust, solenoid pilot 8/2
2) Valve supply, port 1
3) Threaded connection of exhausts 3/5
4) Valve supply, port 11
5) Electrical control supply X
6) Blind end plate
7) Screw for valve wall mounting
8) Utility port for pipe, Ø 8mm
9) Utility port for pipe, Ø 6mm
10) Utility port for pipe, Ø 4mm
11) Manual control
12) LED (LED on, solenoid valve energised)
13) Pneumatic symbol
14) Identification of the monostable or bistable manual control
15) Valve ordering code
16) Valve identification code
17) Blank space for valve number

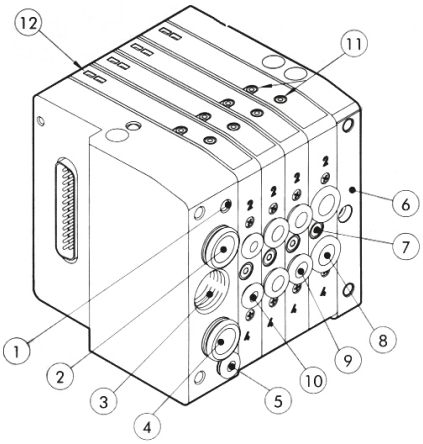

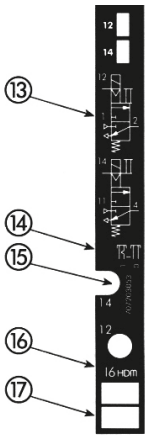

MULTIMACH VALVE SYSTEM

To order your custom Multimach valve island, simply copy this page and send it completed with your order

Description	Id	9149	Function	Symbol	Fittings	Body Width mm	Quantity
Valve	K4	7071030111	5/2 Sol/Sol	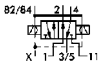	4mm	11.5	
	V4	7071030131	5/2 Sol/Spring	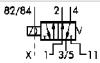	4mm	11.5	
	O4	7071030211	5/3 Sol/Sol Cc	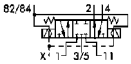	4mm	11.5	
	I4	7071030531	2 x 3/2 N/C	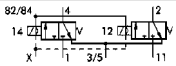	4mm	11.5	
	K6	7072030111	5/2 Sol/Sol	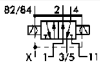	6mm	11.5	
	V6	7072030131	5/2 Sol/Spring	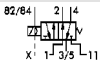	6mm	11.5	
	O6	7072030211	5/3 Sol/Sol Cc	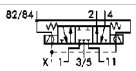	6mm	11.5	
	I6	7072030531	2 x 3/2 N/C	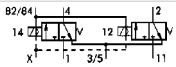	6mm	11.5	
	K8	7073030111	5/2 Sol/Sol	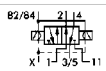	8mm	14	
	V8	7073030131	5/2 Sol/Spring	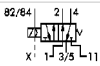	8mm	14	
	O8	7073030211	5/3 Sol/Sol Cc	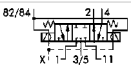	8mm	14	
	I8	7073030531	2 x 3/2 N/C	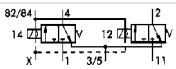	8mm	14	
End Plate	3	0227301201	Standard Inlet Plate		10mm	24.5	
	2	0227301200	Dual Pressure Inlet Plate			24.5	
	5	0227301500	Blind End Plate			11.7	
Intermediate Plate	6	0227301301	Intermediate Air Supply Plate			14	
	7	0227301302	Intermediate Blind Plate			14	
	20	0227301303	Intermediate Exhaust Plate			14	
Bracket	16	0227301600	For DIN Rail Mounting			n/a	
25mm Pin Connector	14	0226180101	Connector without Cable			n/a	
		0226900100	Connector with 1m Cable			n/a	
		0226900250	Connector with 2.5m Cable			n/a	
		0226900500	Connector with 5m Cable			n/a	

Assemblies delivered fully assembled and tested within 3-5 days as standard
(1-2 days by special arrangement)
Manual overrides are latching type as standard (non-latching version is also available upon request)
More valve variations available (please ask for full technical catalogue)
CM CLEVER Multimach also available with Fieldbus and ASi interfaces

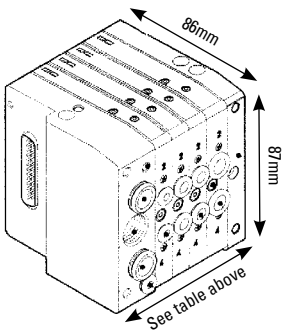

EB 80 ELECTRO-PNEUMATIC SYSTEM

EB 80 is defined as an electro-pneumatic system as it would be simplistic to use the term 'solenoid valve island'. In effect, a single assembly can combine solenoid valves of all types, multi-position bases, pneumatic and electric supplies arranged as desired in a system, digital or analogue input or output signal control modules and much more besides.

The EB 80 system is protected by numerous patents and utility models, which enhance the most innovative design solutions.

The possible combinations are endless, but the most amazing thing is that they can be obtained using a small number of basic components.

In order to achieve this objective, a single size of small yet high-performance valves to cover the vast majority of applications was conceived.

A single electronic control unit is provided when supplying 12VDC or 24VDC valves with multi-pole cables or with a field bus for each protocol.

All EB 80 versions come with an efficient diagnostic system.

NSF H1 certified grease is used to lubricate the valve spool and seals.

Technical Data

Supply voltage range	V	12 -10% 24 +30%					
Minimum operating voltage	V	10.8 *					
Maximum operating voltage	V	31.2					
Maximum admissible voltage	V	32 ***					
Power for each controlled pilot	W	3 for 15 ms, then holding 0.3					
Drive (for multi-pole)		PNP or NPN					
Solenoid rating		100% ED					
Solenoid valve supply power		See chapter "Electrical connection - E"					
Signal module supply power		See chapter "Signal module - S"					
Protection		Overload and short-circuit protected solenoid pilot Output					
Diagnostics		See chapter "Electrical connection - E"					
Maximum number of solenoid pilots		21 or 38 multi-pole connection; field bus 128					
Ambient temperature	°C	-10 to + 50 (at 8 bar)					
	°F	14 to 122 (at 8 bar)					
Operating pressure		**5/2 and 5/3**			**2/2 and 3/2**		
Non-assisted valves	bar	3 to 8			3.5 to 8		
	MPa	0.3 to 0.8			0.35 to 0.8		
	psi	43 to 116			51 to 116		
Assisted valves	bar	Vacuum to 10					
	MPa	Vacuum to 1					
	psi	Vacuum to 145					
Servo pressure	bar	3 to 8			min. / max. 8		
	MPa	0.3 to 0.8			min. / max. 0.8		
	psi	43 to 116			min. / max. 116		
Valve flow rate, at 6.3 bar ΔP 1 bar		**Ø 4 (5/32")**	**Ø 6**	**Ø 8 (5/16")**	**Ø 1/4"**	**Ø 10 ****	**Ø 3/8" ****
valve 2/2	Nl/min	350	430	500	430	-	-
valve 3/2	Nl/min	350	600	700	600	1250	1250
valve 5/2	Nl/min	350	650	800	650	1250 - 1400	1250 - 1400
valve 5/3	Nl/min	350	460	500	460	1000 - 1250	1000 - 1250
valve V3V (R)	Nl/min	-	-	-	-	1000	1000
Actuation response time (TRA) / reset response time (TRR) at 6 bar							
TRA/TRR valve 2/2 and 3/2	ms	14 / 28					
TRA/TRR valves 5/2 monostable and shut-off valve	ms	12 / 45					
TRA/TRR valve 5/2 bistable	ms	9 / 11					
TRA/TRR valve 5/3	ms	15 / 45					
TRA/TRR valve 3/2 high flow	ms	13 / 36					
Fluid		Unlubricated air					
Air quality required		ISO 8573-1 class 4-7-3					
Degree of protection		IP65 (with connectors connected or plugged if not used)					

* **Minimum voltage 10.8V required at solenoid pilots.**
** Using high-flow valves or connected valves
*** **IMPORTANT! Voltage greater than 32VDC will damage the system irreparably.**
N.B.: Refer to EB 80 sub-assembly for specific technical data.

The following pages contain further technical data regarding the system.
For further information, or to request a quote, please contact our sales team.

EB 80 ELECTRO-PNEUMATIC SYSTEM

Components

EB 80 systems are identified by a set of sub-assemblies:

S 1/0 **S**ignal modules
E **E**lectrical connection
P **P**neumatic supply
B **B**ases for solenoid valves; the valves are fixed on the bases
M Inter**M**ediate Modules
C **C**losed end-plate

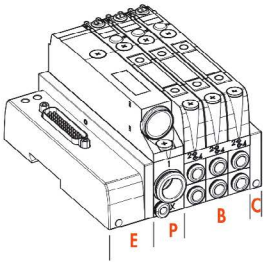

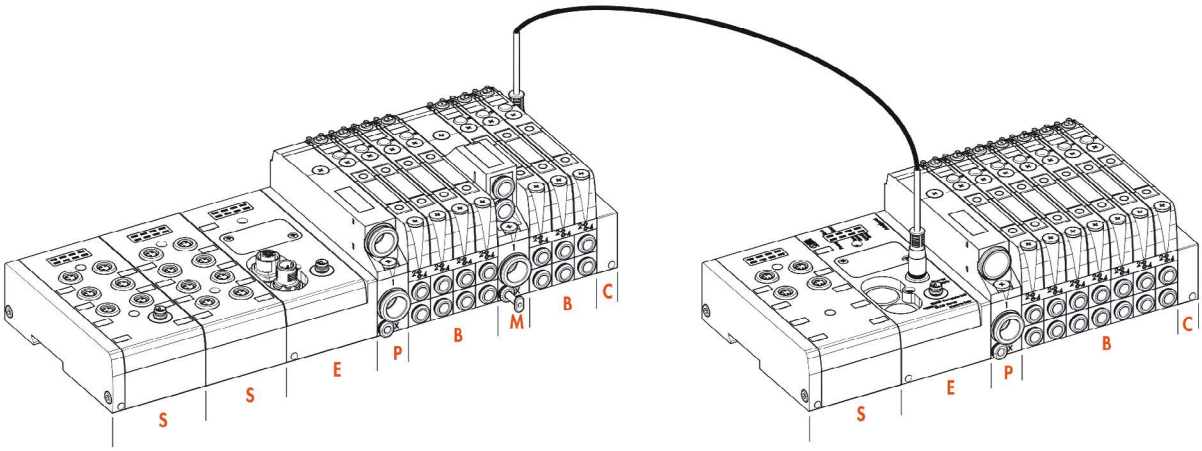

Components – Solenoid Valve & Base

1. BASE: technopolymer
2. VALVE BODY: technopolymer
3. CONTROL: technopolymer
4. BASE: technopolymer
5. SPOOL: chemically nickel-plated aluminium
6. CONTROL PISTON: stainless steel and NBR
7. SPRING: Oteva® steel and Dacromet® treatment
8. SOLENOID VALVE
9. ELECTRONIC BOARD
10. LED light display: technopolymer
11. MANUAL CONTROL: nickel-plated brass
12. SCREW SECURING VALVE TO THE BASE: galvanised steel
13. SPOOL GASKET: NBR
14. Push-in fitting CARTRIDGE for port 2
15. Push-in fitting CARTRIDGE for port 4

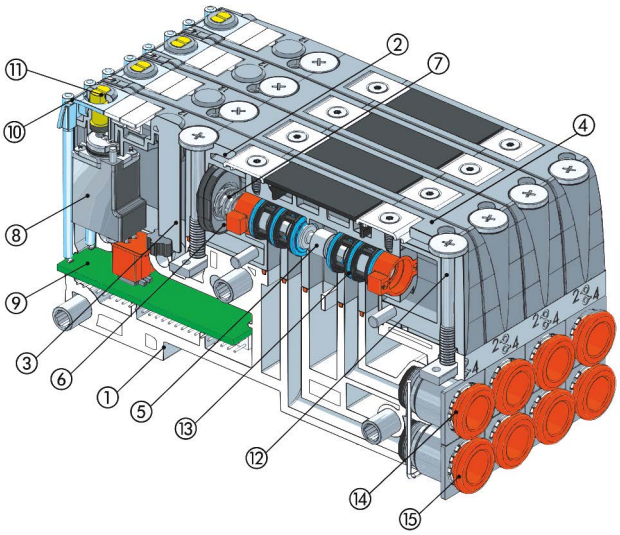

EB 80 ELECTRO-PNEUMATIC SYSTEM

The EB 80 World

Electrical Connection – E

E025	E044	E0EN	E0EC	E0PN	E0CN	E0PB	E0PL	E01O	E0AD
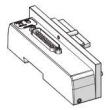	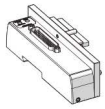	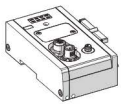	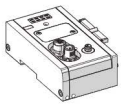	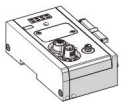	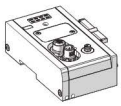	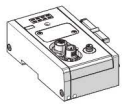	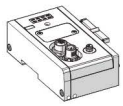	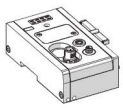	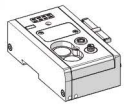
EB 80 25-pin electrical connection	EB 80 44-pin electrical connection	EB 80 electrical connection EtherNet/IP	EB 80 electrical connection EtherCAT	EB 80 electrical connection Profinet IO	EB 80 electrical connection CANopen	EB 80 electrical connection Profibus-DP	EB 80 electrical connection Ethernet POWERLINK	EB 80 electrical connection IO-Link	Additional electrical connection EB 80

Signal Module – S

S01	S02	S03	S04	S05	S06	S07	S08
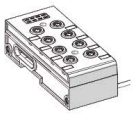	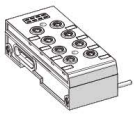	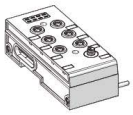	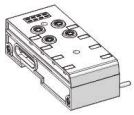	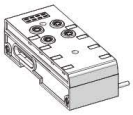			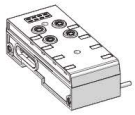
EB 80 module with 8 M8 digital inputs	EB 80 module with 8 M8 digital inputs	EB 80 module with 6 M8 digital outputs + electrical supply	EB 80 module with 4 M8 analogue inputs	EB 80 module with 4 M8 analogue outputs	EB 80 module with 16 digital terminal block inputs	EB 80 module with 16 digital terminal block inputs	EB 80 module with 4 M8 analogue inputs for temperature measurement

Part included in the
Electrical Connection – E
with Fieldbus

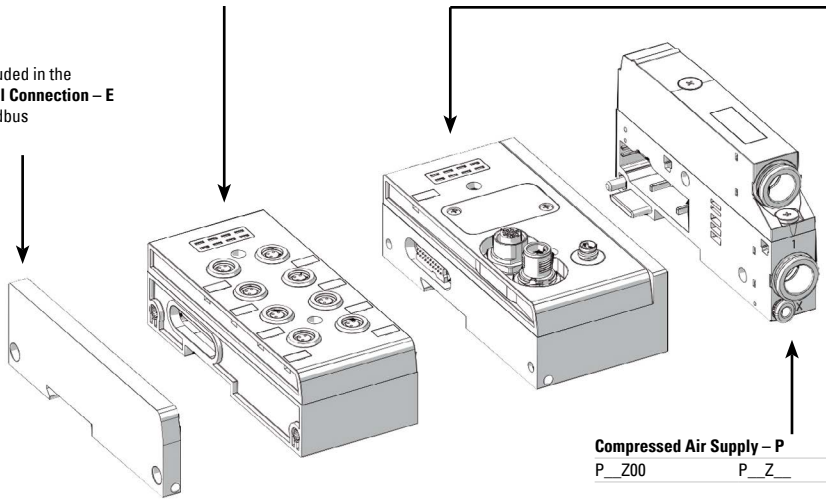

Compressed Air Supply – P

P__Z00	P__Z__	P__Z60	P91Z90
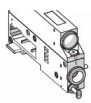	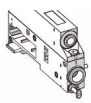	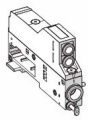	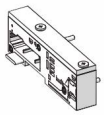
Compressed air supply – silenced relief	Compressed air supply – conveyed relief	Compressed air supply – separate relief	Module for electric version only

EB 80 ELECTRO-PNEUMATIC SYSTEM

The EB 80 World

Valves

Z_	I_	W_	L_	V_	K_	O_	G_	J_	R_	N0	Y8
	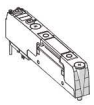	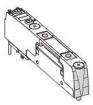			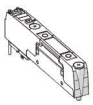	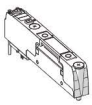				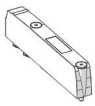	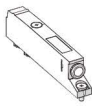
2 valves 2/2 NC	2 valves 2/2 NC (valid as 5/3 OC)	2 valves 2/2 NO (valid as 5/3 PC)	3/2 NC + 3/2 NO	Monostable 5/2	Bistable 5/2	5/3 CC	3/2 NC high flow	3/2 NO high flow	Shut-off valve	Dummy valve	Bypass

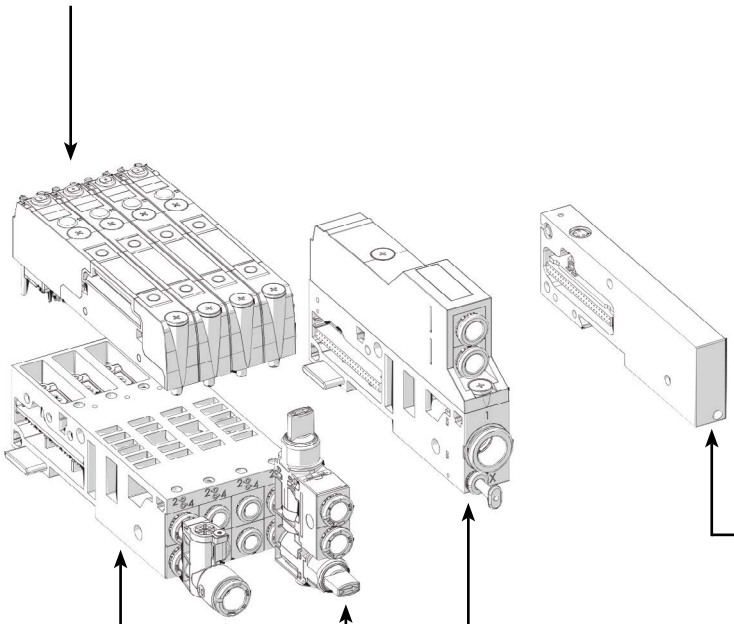

Closed End Plate – C

C1	C2	C3
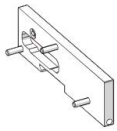	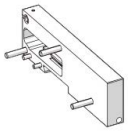	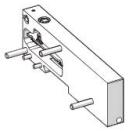
Closed end plate for islands with multi-pole connector fieldbus	Closed end plate for islands with fieldbus	Closed end plate for electrical connection of islands with fieldbus to additional islands

Intermediate Support – M

M___Z0_	M___Z__	M___Z6__
	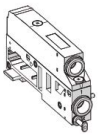	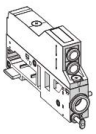
Intermediate module – silenced relief	Intermediate module – conveyed relief	Intermediate module – separate relief

Bases for Valves – B

B3_____0	B4_____
3-position base for valves	4-position base for valves

Y Fittings

R2
Y fitting

Multi-function Module

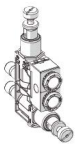

Fittings with pneumatic functions

EB 80 ELECTRO-PNEUMATIC SYSTEM

Fixing Options

1. **Fixing on a DIN bar:** tighten the grub screws into modules E (electrical connection) and C (closed end plate).
   For islands with more than 40 valves or 5 modules, also use the additional plate, code 02282R4001.

2. **Fixing on a flat surface:** use the pair of brackets, code 02282R4000, and the M5 x 20 screws supplied.
   You can choose where to position the brackets in relation to the island:

   2A. **Protruding brackets:** can be used to install the island plus brackets unit from above. First secure the brackets to the modules E and C using the grub screws, then secure everything with M5 x 20 screws.

   2B. **Concealed brackets:** the overall dimensions of the island are reduced. First secure the brackets to the flat top with M5 x 20 screws, then place the island onto the brackets and lock the two grub screws provided in the modules E and C.

3. **Fixing through a wall:** use the brackets, code 02282R4000. The brackets come with M6 threaded holes and can be fixed with M6 screws (not included in the supply) passing through the wall. The brackets can be fixed either protruded or concealed.

NB: planar surfaces are required to ensure correct fixing. Avoid twisting or bending the valve units.

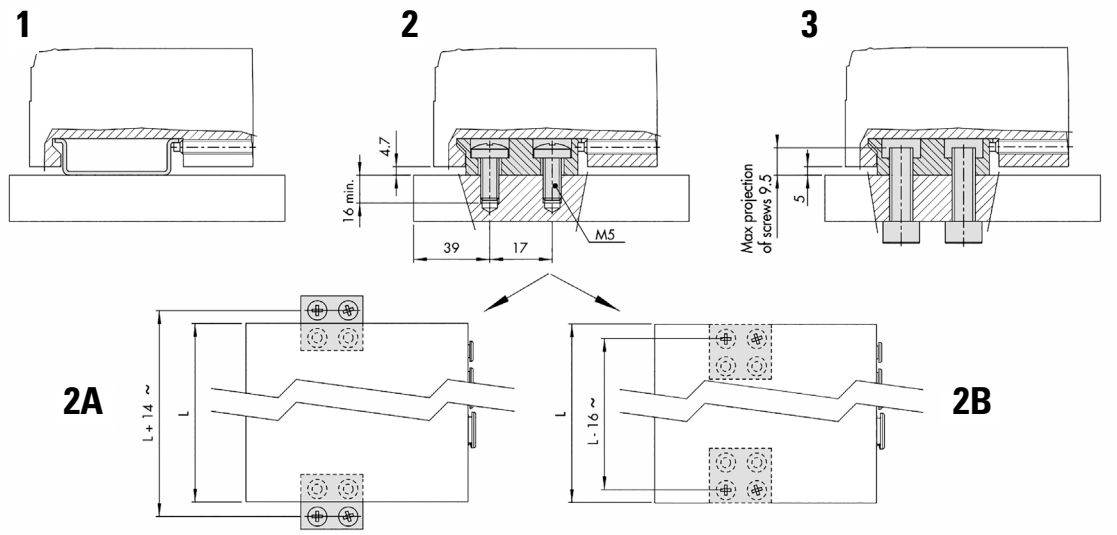

Lubrication

The EB 80 electro-pneumatic system is designed to run millions of cycles without the need for any lubrication. This is possible thanks to the optimisation of its components and the use of a special grease with excellent properties and NSF H1 certified. To avoid removing the grease, it is highly recommended not to lubricate the valve input and output ports and check the quality (to ISO 8573-1 class 4-7-3) of the compressed air used, which is often contaminated by particularly aggressive oils that are released by compressors and are not always compatible with the elastomers used in the valves.

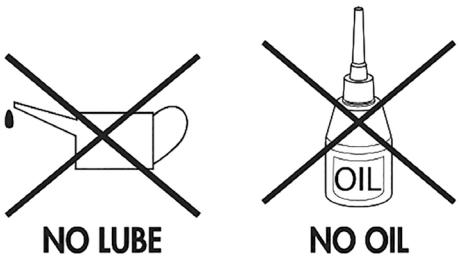

Some Characteristics of EB 80 Systems

Horizontal Modularity

Easy replacement or addition of any sub-assembly. The locking tie rods are included in each sub-assembly.

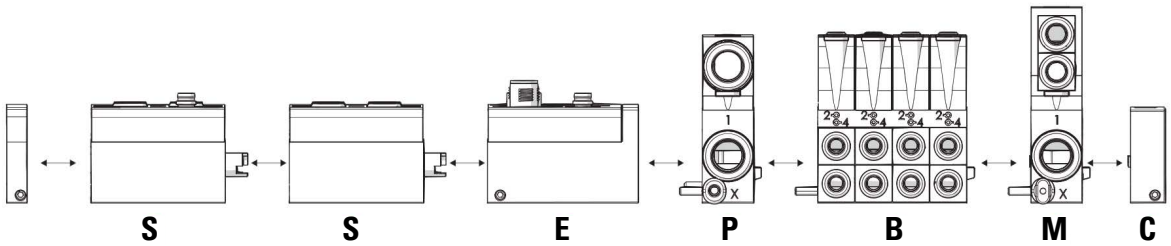

EB 80 ELECTRO-PNEUMATIC SYSTEM

Vertical Modularity

Easy replacement (no need to disassemble the pack) of the valves on the bases, and also of the top part (cover) of subsystems **S, E, P, M** using a single Phillips-head screwdriver.

NB: all protocols can be mounted on the base for field buses and all input or output modules can be mounted on the same base for signals.

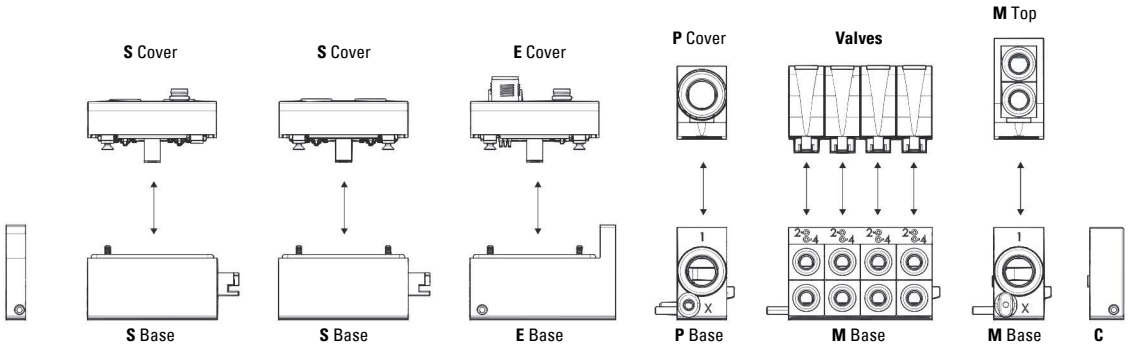

One Size Fits All

Reduced dimensions
High flow rate
One warehouse and spares

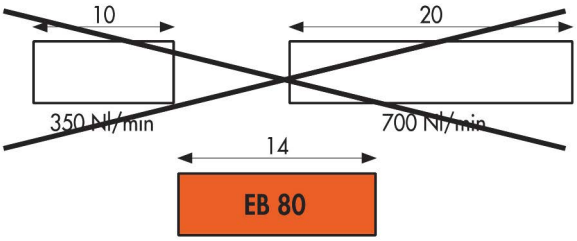

800 Nl/min – 5/2
1250 Nl/min – 3/2 high flow

The same base fits both multi-pole connections and field buses

- Controls from multi-pole connections
- Controls from field buses
- Diagnostics

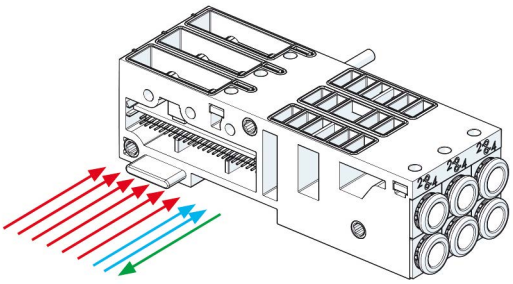

PATENTED

The same base island can be supplied 10.8 – 31.2V DC

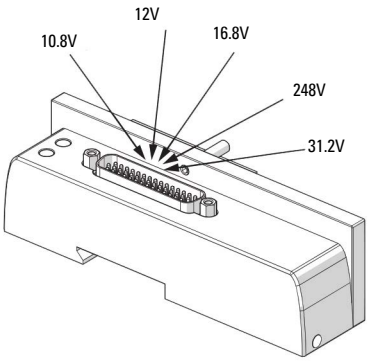

EB 80 ELECTRO-PNEUMATIC SYSTEM

Description

A complete system has a compound description of all its subsystems listed in sequence from left to right, as shown below. The abbreviation of each subsystem is obtained by taking the code and omitting the first digits – 02282.

For example: the digital 8-input signal module is identified with code 02282S01; only write S01 in the description.

The abbreviation of each base for valves consists of:

Abbreviation of the Base	Manual valve control	Type of valves
Obtained from the code, after removing 02282	0 = monostable 1 = bistable	Valves Dummy valve Bypass
Example		
4-position base, 8 solenoid pilots, Ø 6 pipe; code 02282B4086666	Monostable	2 monostable 5/2 valves - V 1 double 3/2 NO - W 1 dummy valve - F
Abbreviation		
B4086666	0	VVWF

The description is therefore a sequence of this type:

EB 80	- S_ _	- E_ _ _	- P_ _ _ _ _	- B_ _ _ _ _ _ _ _ _ _ _ _	- M_ _ _ _ _ _	- C_
EB 80 system	**Signal module** (if present)	**Electrical connection**	**Compressed air supply**	**Base for valves** (as many as there are) with normal or dummy	**Intermediate** (if present)	**Closed end-plate**

Example:

EB 80-S01-E0EN-P3XZ00-B40866660VWKN-M300Z30-B30388800VVN-C2

EB 80	- S01	- E0EN	- P3XZ00	- B40866660VWKN	- M300Z30	- B30388800VVN	- C2
EB 80 system	**Signal module** complete 8 M8 digital inputs	**Electrical connection** EtherNet/IP	**Compressed air supply** - fitting Ø 12 - pilot servo Ø 4 - silenced relief	**Base for valves** - 4 positions - 8 controls - fittings for pipe Ø 6 - manual monostable control - 5/2 monostable valve - 2 3/2 NO valves - bistable 5/2 valve - dummy valve	**Intermediate** - fittings for pipe Ø 12 - through ports - without supplementary power supply	**Base** - 3 positions - 3 controls - fittings for pipe Ø 8 - manual monostable control - 5/2 monostable valve - 5/2 monostable valve - dummy valve	**Closed end-plate** for valve Island with field bus

An endless number of EB 80 systems can be obtained and their description is variable in length, which can be very extended. The actual ordering CODE of an EB 80 system is created by Metal Work S.p.A. with a limited number of characters.

The ordering code is not explicative. The description only is univocal, complete and explicative.

Accessories

Fixing Bracket

Code	Description	Weight g
02282R4000	EB 80 base fixing bracket	47

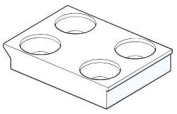

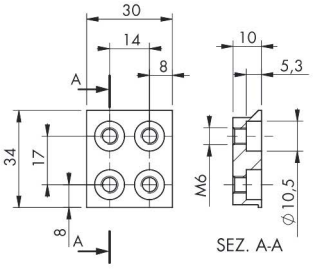

Note: 2 pieces per pack complete with 4 M5 x 20 screws.

Further accessories (e.g. connectors) and spare parts are available.
Contact our sales team.

EB 80 ELECTRO-PNEUMATIC SYSTEM

EB 80 Industry 4.0

The new advanced EB 80 diagnostic functions, known as EB 80 14.0, provide a powerful analysis tool for traditional maintenance operations, ensuring the safe, reliable and lasting operation of production units.

They are available for all electrical connections with field buses and bases marked 14.0, with advanced diagnostics integrated in accordance with Industry 4.0 philosophy.

These functions use the original EB 80 diagnostics, integrating them with the ability of the station itself to control IOs.

They reorganise and optimise maintenance management by developing predictive maintenance in order to:

Predict faults

Intervene early to avoid system downtime

Have all information on equipment operation available, in real time

Monitor component end-of-lifetime

Optimise warehouse spare parts management

This makes it possible to turn the data collected into concrete actions using standard EB 80 stations without needing additional modules.

Description of EB 80 14.0 Functions

- System data:
  - EB 80 system start-up counter
  - Supply alert counter
- Valve data. Each valve base for each solenoid valve permanently stores the following information:
  - Cycle counter
  - Counter for total solenoid valve excitation time
  - Activation of a flag to signal overage lifetime exceeded
  - Short circuit alert counter
  - Open circuit alert counter

Electro-pneumatic system control functions (data updated with each cycle):

- Measurement of the delay between activating the solenoid valve 'A' and actuator movement commencing via the signal of sensor 'B', with delays that exceed the limit flagged
- Measurement of actuator movement time using two linked sensors 'B' and 'C', with exceeded time limits flagged
- Measurement of the delay between deactivating the solenoid valve 'A' (or activating a second valve) and actuator return commencing via the signal of sensor 'B', with exceeded time limits flagged;
- Measurement of actuator return time using two linked sensors 'B' and 'C', with exceeded time limits flagged
- Counter for actuator range of motion

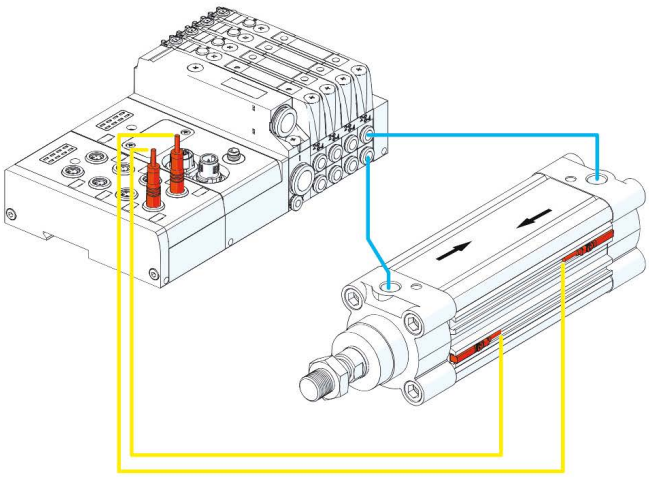

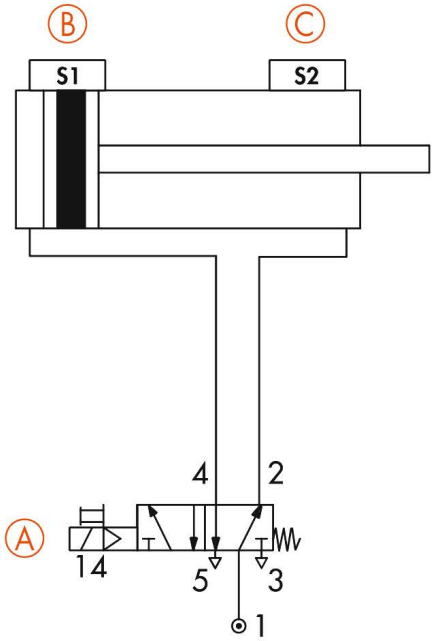

EB 80 ELECTRO-PNEUMATIC SYSTEM

EB 80 Industry 4.0

Electrical connection modules can be used to complement the EB 80 with the main field buses available in the market. In this way, the control system (generally a PLC) can handle, in real time, the behaviour of the solenoid valve island, including signal modules.

With the introduction of the 14.0 version, the field bus connection modules also send to the network the historical and diagnostic data relating to the behaviour of the island (such as the number of cycles for each solenoid pilot, total activation time and alarms) and the controlled pneumatic circuit (such as the delay times in sensor switching and actuator activation times).

This data is also sent to the control system and can be handled differently depending on the situation: in some cases, it can be used in real time, like in the case of fault alarms; in other cases, it can be sent to a local storage unit or one remotely controlled on a cloud server, and is analysed at a subsequent stage; in other cases, the alarms can be sent to a teleservice station that can monitor the state of the system remotely.

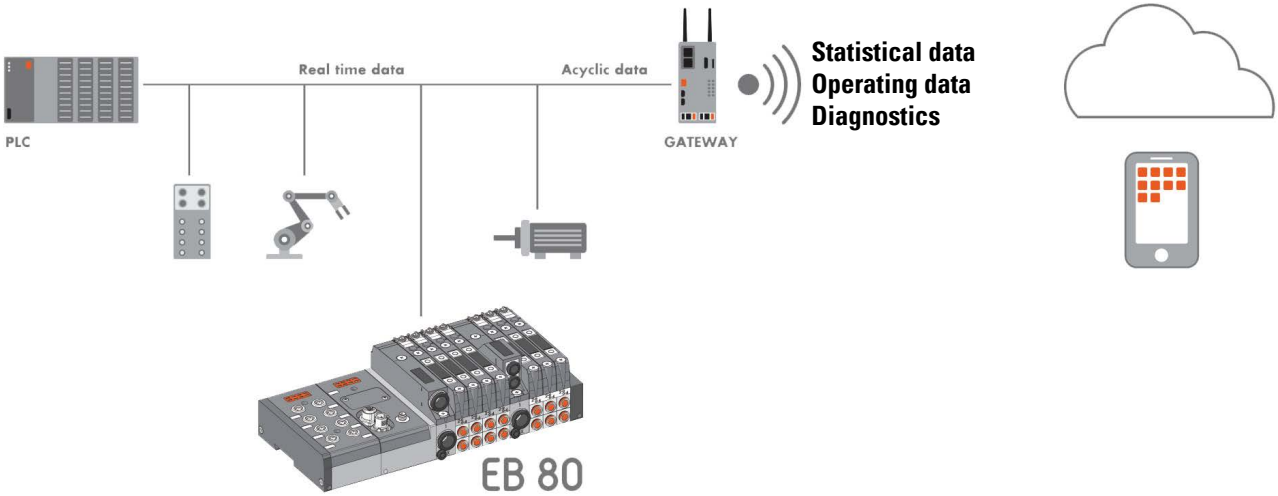

For further information, or to request a quote, please contact our sales team

SPECIAL PURPOSE VALVES

In-line Progressive Starter

The in-line progressive starter is a valve that regulates the flow of air until the outlet pressure reaches a certain value, at which the valve opens and allows air to flow at full rate.

This valve can be used to control a group of valves or a single valve, it can also be mounted between another valve and an actuator.

The air that enters inlet 1 passes through a choke that has a knob adjustment to control the flow. The valve opens completely when the outlet pressure reaches about 60% of the inlet pressure. If the air supply is switched off, the valve discharges air from outlet 2 to inlet 1.

Working Temperature:
-10°C to 70°C

Maximum Working Pressure:
10 bar

1/4" & 1/2"

9149	Thread
W3606000002	G1/4"
W3606000004	G1/2"

REDUCER WITH GAUGE

For Valves

The RMV-series miniature pressure regulator with pressure gauge for valves is specifically conceived for mounting on the outlets of valves with a 1/8" port.

With limited cross dimension, it can be fitted to a series of small valves. The body is 16.5 mm wide and fits exactly on the valves of the Mach 16 series for multiple electrical connection.

Using the RMV, it is possible to differentiate the pressure of each single output of the valves. For example, if you mount it on port 2 and not on port 4, the pressure can be reduced on port 2 only. If you mount one for each port, the pressure on port 2 will differ from that on port 4, which in turn is less than the feed pressure (outlet 1).

There are three 1/8" threaded RMV ports that are pneumatically connected in parallel. A small pressure gauge is mounted in one port; another port is plugged by an A7-type fitting and a third can take a fitting.

The user, however, can decide whether the layout of components is to be modified or not. He might, for example, decide to mount three fittings to create a three-port reduced-pressure distributor.

Regulation Range 1 to 8 bar

Input Pressure 2 to 10 bar

Flow Rate at 6.3 bar (0.63 MPa - 91 psi) DP 1 bar 140 NI/min

Flow Rate at free exhaust at 6.3 bar (0.63 MPa - 91 psi) 360 NI/min

Working Temperature:
-10°C to 60°C

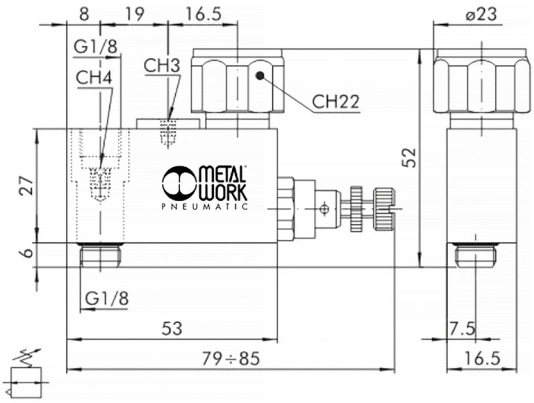

Series RMV

9149	Description
9061601	Line on Line RMV 1/8" Pressure Reg Assembly

PRESSURE & VACUUM SWITCHES

Adjustable Pressure Switch

This type of pressure switch features a high degree of miniaturisation and a modern attractive design

It can be installed in any position and also mounted onto a wall by means of two transversal holes

In order to reduce wiring times, it is supplied ready assembled with a 2-metre electric cable or an M8 connector with a 300-mm cable

The contact is the switching type, which means it can be normally open or normally closed

A knurled push-lock handle is provided for regulation

Working Temperature:
+50°C

Maximum Working Pressure:
15 bar

With 2 Metre Cable

9149	Thread
9000401	1/8"

Adjustable Pressure Switch

With M8 Connector & 300mm Cable

9149	Thread
9000402	1/8"

Digital Pressure Switch

The digital pressure switch can be used to transmit electric pressure signals and also display the pressure instantly. The signal is transmitted for two settable pressure values and with an analogue voltage signal. The values are clearly displayed on a LED video and different parameters can be entered from the keypad. Hysteresis can be adjusted and the unit of measurement for pressure can be modified. Two compressed air ports are provided, one at the back and one on the bottom. The pressure switch comes with a threaded plug in the bottom port. If you wish to connect to this port, merely unscrew the plug and screw it into the back port. A kit of accessories is provided for fixing to the top or wall, or to a panel.

Maximum Working Pressure:
10 bar

With Digital Display Showing Pressure Reading

9149
9000600

Security Knob

NOTE: Pull outwards to remove the knob from the pressure switch on the unit. Insert the security knob and regulate the pressure switch. Then press the handle firmly to lock it in position. If the pressure switch needs to be reset, remove the security knob by forcing it laterally with a screwdriver.

To suit 9000401 & 9000402

9149
9200703

SPECIAL PURPOSE VALVES

Two Hand Safety Valve

Technical Specifications

- Compressed air couplings: push-in fittings for Ø4mm pipe
- Fluid: filtered, non-lubricated compressed air
- Standard: EN574 type IIIA, TUV approved, certified M6020244919001
- Synchronisation, maximum time between two signals: 0.4 sec
- De-activation time, with 1000mm maximum pipe length: <0.05 sec
- Actuation: pneumatic
- Reset: spring operated
- Nominal diameter: 2.7mm
- Mounting position: any direction

Materials

- Body: anodised aluminium
- Internal parts: brass and technopolymer
- Gaskets: NBR
- Spring: alloy steel

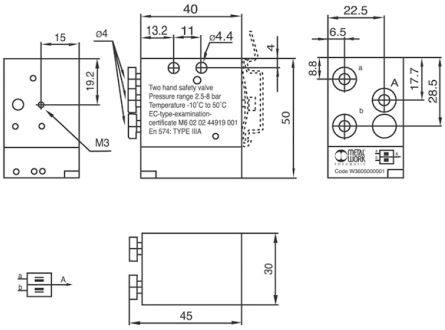

Working Temperature:
-10ºC to +60ºC

Working Pressure:
2.5 to 8 bar

4mm Push-in Fittings

0335
W3605000001

Complete Two Handed Push Button Assembly

4mm Push-in Connections

0335	Description
0227700000	4mm OD Push-in Inlets & Outlets

MINIATURE FRLS, 'BIT'

Miniature Filter

- Flow rate at 6 bar ΔP 0.5 bar: 860 Nl/min
- Fluid: compressed air
- Weight: 40g
- Mounting position: vertical
- Condensate drain: manual/semi-auto
- Bowl capacity: 16cm³

Maximum Temperature at 10 bar: +50°C

Maximum Inlet Pressure: 13 bar

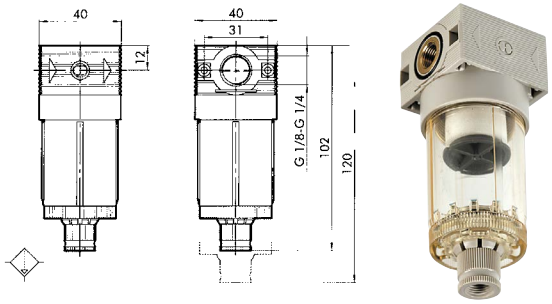

BSPP

9154	Thread BSPP	Micron µm
5101002	G1/8"	20
5101001	G1/8"	5
5201002	G1/4"	20
5201001	G1/4"	5

Miniature Pressure Regulator

- Flow rate at 6 bar ΔP 0.5 bar: 340 Nl/min
- Fluid: filtered, lubricated or non-lubricated compressed air
- Weight: 80g
- Mounting position: any
- Gauge port: G1/8"

Maximum Temperature at 10 bar: +50°C

Maximum Inlet Pressure: 13 bar

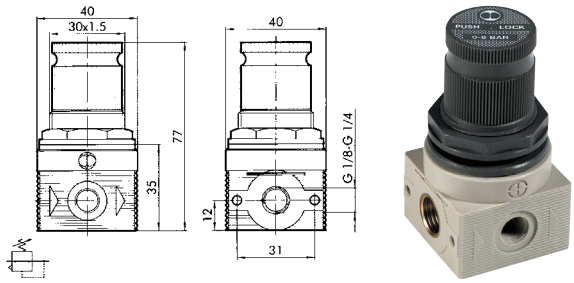

BSPP

9154	Thread BSPP	Pressure Range bar
5107003	G1/8"	0 to 8
5107004	G1/8"	0 to 12
5207003	G1/4"	0 to 8
5207004	G1/4"	0 to 12

Miniature Lubricator

- Type of lubrication: oil mist
- Bowl capacity: 26.5cm³
- Flow rate at 6 bar ΔP 0.5 bar: 400 Nl/min
- Fluid: compressed air
- Weight: 40g

Maximum Temperature at 1MPa, 10 bar (145 psi): +50°C

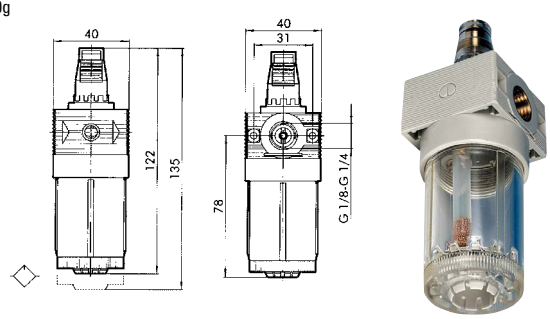

BSPP

9154	Thread BSPP
5103001	G1/8"
5203001	G1/4"

Miniature Pressure Regulator, Padlockable

BSPP

9154	Thread BSPP	Pressure Range bar
5110003	G1/8"	0 to 8
5110004	G1/8"	0 to 12
5210003	G1/4"	0 to 8
5210004	G1/4"	0 to 12

MINIATURE FRLS, 'BIT'

Miniature Filter Regulator

- Flow rate at 6 bar ΔP 0.5 bar: 290 Nl/min
- Fluid: compressed air
- Weight: 110g
- Mounting position: vertical
- Gauge port: G1/8"
- Bowl capacity: 16cm³
- Condensate drain: manual/semi-auto

Maximum Temperature at 10 bar: +50°C

Maximum Inlet Pressure: 13 bar

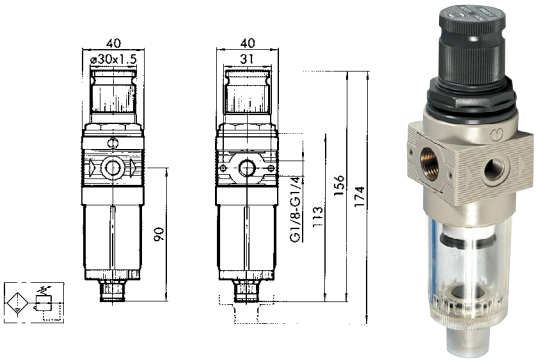

BSPP

9154	Thread BSPP	Micron µm	Pressure Range bar
5105008	G1/8"	20	0 to 8
5105011	G1/8"	20	0 to 12
5205008	G1/4"	20	0 to 8
5205011	G1/4"	20	0 to 12

Miniature Filter + Regulator + Lubricator Set

- Flow rate at 6 bar ΔP 0.5 bar: 150 Nl/min
- Fluid: compressed air
- Weight: 160g
- Mounting position: any
- Gauge port: G1/8"

Maximum Temperature at 1MPa, 10 bar (145 psi): +50°C

Maximum Inlet Pressure: 13 bar

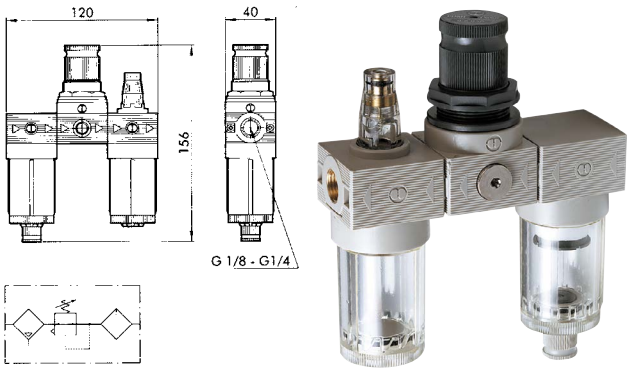

BSPP

9154	Thread BSPP	Micron µm	Pressure Range bar
5104008	G1/8"	20	0 to 8
5104011	G1/8"	20	0 to 12
5204008	G1/4"	20	0 to 8
5204011	G1/4"	20	0 to 12

Miniature Oil Removal Filter

- Degree of filtration: 99.97% 0.01µm
- Flow rate at 6 bar ΔP 0.5 bar: 700 Nl/min
- Fluid: compressed air
- Weight: 65g
- Mounting position: vertical
- Condensate drain: manual/semi-auto
- Bowl capacity: 16cm³

Maximum Temperature at 10 bar: +50°C

Maximum Inlet Pressure: 13 bar

NB: it is advisable to mount a 5µm filter upstream acting as a rough filter.

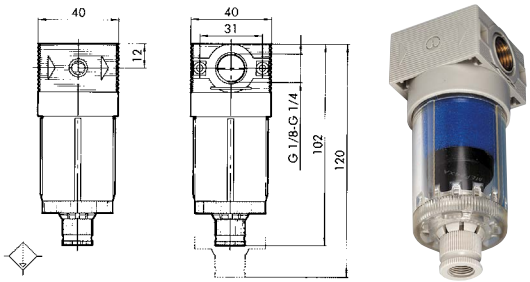

BSPP

9154	Thread BSPP
5212001	G1/4"

MINIATURE FRLS, 'BIT'

Miniature Filter Regulator + Lubricator Set

- Flow rate at 6 bar ΔP 0.5 bar: 140 Nl/min
- Flow rate at 6 bar ΔP 1 bar: 260 Nl/min
- Fluid: compressed air
- Weight: 170g
- Mounting: vertical
- Gauge port: G1/8"

Maximum Inlet Pressure: 13 bar

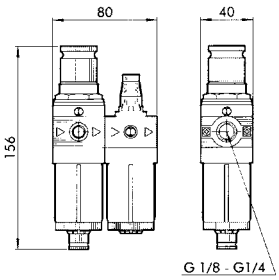

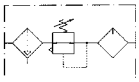

BSPP

9154	Thread BSPP	Micron µm	Pressure Range bar
5106008	G1/8"	20	0 to 8
5106011	G1/8"	20	0 to 12
5206008	G1/4"	20	0 to 8
5206011	G1/4"	20	0 to 12

For **Gauges** see **Section 10**

Mounting Hardware

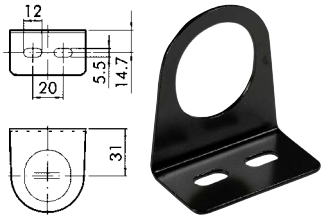

Bit Regulator Bracket

9154	Description
9200701	Mounting Bracket
9170301	Wall Mounting Kit

Automatic Drain

To Suit Miniature Filters

9154	Description
9000803	For Miniature Filters

Filter Bowl, Semi-automatic

To Suit Miniature Filters

9154	Description
9255101	Miniature Filter Bowl

Filter Elements

Spare

9154	Micron µm
9251708	5
9251709	20
9251712	For Coalescing Filter, 0.001

FILTER REGULATOR FOR WATER, 'BIT' SERIES F

- Filtering and/or water pressure regulation units, characterised by the use of materials certified to specific standards on products for use in contact with foodstuff or drinking water.
- Declarations of conformity and release test reports are available on request for those who need them to certify our product incorporated in their own systems.
- The white colour surface finish of the body was chosen to enhance the highly hygienic properties of the product.
- If the pressure regulator works with incompressible fluids (water) and there is a valve leak, the downstream pressure could rise up to reach the inlet pressure and then it re-stabilises with water consumption.
- If necessary, consider the possibility of installing a safety valve that relieves any excess pressure.

- Fluid: water, air and fluids compatible with materials used
- Flow rate at 6.3 bar ΔP 1 bar: 6 up to 14.5 l/min dependant on model (refer to sales department)
- Gauge port: regulator, filter regulator, 1/8" BSPP
- Mounting: fixing plates 9170301, regulator bracket 9200701

Certifications

- European Regulation (EU) 10/2011, KTW, W270, WRAS, ACS, NSF61
- Approved for compliance with the UBA list, NSF/ANSI 372
- European Regulation (EU) 10/2011, KTW, W270, WRAS, NSF61, DM174/04, KTW, W270, WRAS, ACS, NSF61
- Approved for compliance with the UBA list, DM174/04, KTW, W270, WRAS, ACS, NSF61

Maximum Temperature at 10 bar:
+50°C

Maximum Inlet Pressure:
13 bar

Filter for Water

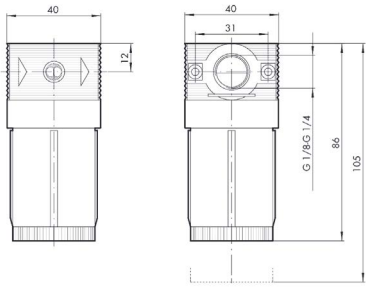

BSPP

9154	Thread BSPP	Micron µm
5101002F	G1/8"	20
5201002F	G1/4"	20

Regulator for Water

Brass Ports, BSPP

9154	Thread BSPP	Pressure Range bar
5108001F	G1/8"	0 to 2
5108002F	G1/8"	0 to 4
5108003F	G1/8"	0 to 8
5108004F	G1/8"	0 to 12
5208001F	G1/4"	0 to 2
5208002F	G1/4"	0 to 4
5208003F	G1/4"	0 to 8
5208004F	G1/4"	0 to 12

Regulator for Water

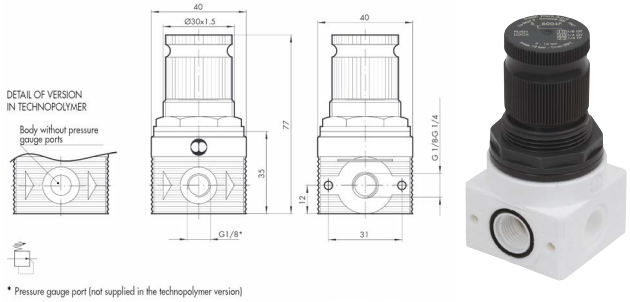

Technopolymer Ports (No Gauge Port), BSPP

9154	Thread BSPP	Pressure Range bar
5228001F	G1/4"	0 to 2
5228002F	G1/4"	0 to 4
5228003F	G1/4"	0 to 8
5228004F	G1/4"	0 to 12

FILTER REGULATOR FOR WATER, 'BIT' SERIES F

Filter Regulator for Water

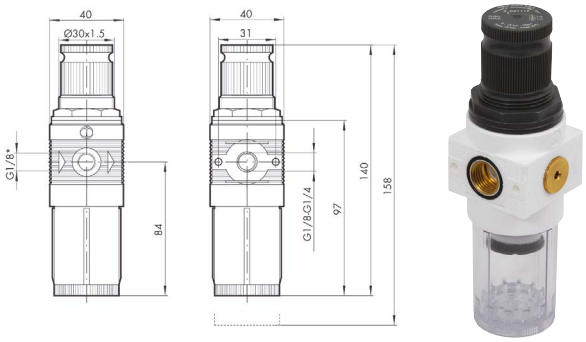

BSPP

9154	Thread BSPP	Micron µm	Pressure Range bar
5105102F	G1/8"	20	0 to 2
5105105F	G1/8"	20	0 to 4
5105108F	G1/8"	20	0 to 8
5105111F	G1/8"	20	0 to 12
5205102F	G1/4"	20	0 to 2
5205105F	G1/4"	20	0 to 4
5205108F	G1/4"	20	0 to 8
5205111F	G1/4"	20	0 to 12

Accessories for BIT Series F for Water

Filter Cartridge Element Assembly

9154	Micron µm
9251709	20

FOOD GRADE FITTINGS

Series F Push-in Fittings, safe for use in the Food Industry

Brass parts are chemically treated with phosphorus nickel-plating according to the NSF®/ANSI 51 standard of the food programme. The seals are made of FDA-approved FKM/FPM. Fittings contain no technopolymer, solving the problem of incompatibility with detergents and other chemicals.

The fittings can be used up to +150ºC, making them suitable for high temperature applications in other industries. The threads are cylindrical and under-head O-rings provide a pneumatic seal. This avoids the need for sealants (e.g. Teflon®) which could release solid fragments during screwing and unscrewing that would contaminate the environment or the fluid. Our fittings can be screwed and unscrewed any number of times and still remain clean and pneumatically sealed.

This choice of materials and treatments make these fittings suitable for use in the chemical, pharmaceutical, medical and electronics industry.

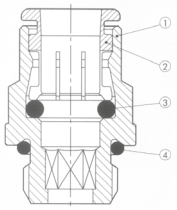

1. Body: chemically nickel-plated brass to NSF®/ ANSI 51 standards
2. Gripper: chemically nickel-plated brass to NSF®/ ANSI 51 standards
3. Fitting seal: FKM/FPM
4. Port seal: FKM/FPM

See pages 314-315

Technical Features

- Threaded ports: M5, G1/8", G1/4", G3/8", G1/2"
- Pipe diameter: 4, 6, 8 and 10mm
- Recommended pipe: Rilsan PA 11, nylon 6, polyamide 12, polypropylene
- Under-head O-ring can be screwed and unscrewed any number of times; no fragments of Teflon or sealant will contaminate the fluid
- Corrosion proof: chemical nickel-plating + FKM/FPM, compatible with numerous substances
- No plastic parts, so no risk of incompatibility

Driven by Customers Designed by Metal Work

EB80 VALVES

Why cut costs on components, putting quality and performance in jeopardy? Make your systems ultra efficient with Metal Work Pneumatics.

METAL WORK®
PNEUMATIC

ISO 9001 QUALITY MANAGEMENT SYSTEM

ISO 14001 ENVIRONMENTAL MANAGEMENT SYSTEM

OHSAS 18001 HEALTH AND SAFETY MANAGEMENT SYSTEM

SYNTESI MONITORED DUMP VALVE

STANDARD SERIES FRLS, 'SYNTESI'

Syntesi® is an important milestone achieved by Metal Work, the result of thirty years' experience producing air treatment units. Syntesi® obtains the best possible performance in a reduced space and with limited weight. The capacity is much higher than that of other units of the same size. These modular units feature a very simple yet effective system that requires no brackets, stay bolts or yoke for assembling the elements.

The basic version of Syntesi® incorporates numerous functions that are not provided or are only optional with traditional units:

- Padlockable knobs
- Additional pneumatic ports on the front and back
- Flow options from left to right or vice versa
- Regulators with compensation system which are accurate even when the upstream pressure changes, with rapid downstream pressure relief
- Full indelible marking
- Automatic condensate drain even in size 1
- 360º visual inspection of oil and condensate levels

The basic materials – technopolymer and nickel-plated brass – have excellent corrosion resistance. An anti-corrosion version is available with stainless steel components (screws and plates) or Geomet® related ones (regulator springs).

Technical Specifications

- Padlockable knob: the knobs of the regulators, filter regulators and standard sectioning valves can all be padlocked
- Fluid: compressed air or other inert gases

Body Size	Threaded Port BSP	Maximum Input Pressure bar	Temperature Range at 1 MPa, 10 bar (145 psi)
1	1/8"	15	-10ºC to +50ºC
	1/4"		
	3/8"		
2	3/8"	13	-10ºC to +50ºC
	1/2"		
	3/4"		
	1"		

Technical Data	Body Size 1			Body Size 2			
Maximum Input Pressure bar	15			13			
Flow Rate Nl/min at 6.3 bar (0.63 MPa, 91 psi) ΔP 1 bar (0.1 MPa, 14 psi)	1300	1650	1750	4500	5200		5200
Weight g	178	173	164	488	461	457	445
Condensate Bowl Capacity cm3	30			70			
Mounting Position	Vertical			Vertical			
Wall Fixing Screws	No. 2 M4 Screws			No. 2 M5 Screws			

Standard Filter, Body Size 1

Manual Drain, BSPP

9154	Thread BSPP	Micron µm
5611F201	G1/8"	20
5612F202	G1/4"	20
5613F203	G3/8"	20

Standard Filter, Body Size 1

Auto Drain, BSPP

9154	Thread BSPP	Micron µm
5611F501	G1/8"	20
5612F502	G1/4"	20
5613F503	G3/8"	20

Standard Filter, Body Size 2

Manual Drain, BSPP

9154	Thread BSPP	Micron µm
5623F203	G3/8"	20
5624F204	G1/2"	20
5625F205	G3/4"	20
5626F206	G1"	20

Standard Filter, Body Size 2

Auto Drain, BSPP

9154	Thread BSPP	Micron µm
5623F503	G3/8"	20
5624F504	G1/2"	20
5625F505	G3/4"	20
5626F506	G1"	20

STANDARD SERIES FRLS, 'SYNTESI'

Oil Removal Filter, Body Size 1

Oil Removal Filter, Body Size 2

Technical Data	Body Size 1			Body Size 2			
Maximum Input Pressure bar	15			13			
Suggested Flow Rate Nl/min at 6.3 bar (0.63 MPa, 91 psi)	460			620			
Weight g	194	189	180	483	456	452	440
Bowl Capacity cm3	15			40			
Mounting Position	Vertical			Vertical			
Wall Fixing Screws	No. 2 M4 Screws			No. 2 M5 Screws			

Manual Drain, BSPP

9154	Thread BSPP	Micron µm
5611D101	G1/8"	0.01
5612D102	G1/4"	0.01
5613D103	G3/8"	0.01

Manual Drain, BSPP

9154	Thread BSPP	Micron µm
5623D103	G3/8"	0.01
5624D104	G1/2"	0.01
5625D105	G3/4"	0.01
5626D106	G1"	0.01

Active Carbon Filter, Body Size 1

Active Carbon Filter, Body Size 2

Technical Data	Body Size 1			Body Size 2			
Maximum Input Pressure bar	15			13			
Suggested Flow Rate Nl/min at 6.3 bar (0.63 MPa, 91 psi)	350			800			
Weight g	195	190	181	483	456	452	440
Inlet Fluid	0.01 ɲm filtred and depurated air			0.01 ɲm filtred and depurated air			
Mounting Position	Any			Any			
Wall Fixing Screws	No. 2 M4 Screws			No. 2 M5 Screws			

Manual Drain, BSPP

9154	Thread BSPP	Micron µm
5611C101	G1/8"	0.003
5612C102	G1/4"	0.003
5613C103	G3/8"	0.003

Manual Drain, BSPP

9154	Thread BSPP	Micron µm
5623C103	G3/8"	0.003
5624C104	G1/2"	0.003
5625C105	G3/4"	0.003
5626C106	G1"	0.003

aircom PIPINGSYSTEM

For **Piping Systems**
see **Industrial Section 5**

STANDARD SERIES FRLS, 'SYNTESI'

Technical Data	Body Size 1			Body Size 2			
Maximum Input Pressure bar	15			13			
Flow Rate Nl/min at 6.3 bar (0.63 MPa, 91 psi) ΔP 1 bar (0.1 MPa, 14 psi)	570	1650	2900	3000	4300		4700
Weight g	193	188	179	546	519	515	503
Mounting Position	Any			Any			
Wall Fixing Screws	No. 2 M4 Screws			No. 2 M5 Screws			
Gauge Port	1/8" BSP			1/4" BSP			

Pressure Regulator, Body Size 1

Relieving, BSPP

9185	Thread BSPP	Pressure Range bar
5611R141	G1/8"	0 to 8
5611R161	G1/8"	0 to 12
5612R142	G1/4"	0 to 8
5612R162	G1/4"	0 to 12
5613R143	G3/8"	0 to 8
5613R163	G3/8"	0 to 12

Pressure Regulator, Body Size 2

Relieving, BSPP

9185	Thread BSPP	Pressure Range bar
5623R143	G3/8"	0 to 8
5623R163	G3/8"	0 to 12
5624R144	G1/2"	0 to 8
5624R164	G1/2"	0 to 12
5625R145	G3/4"	0 to 8
5625R165	G3/4"	0 to 12
5626R146	G1"	0 to 8
5626R166	G1"	0 to 12

KELMK™
Enhanced Quality Performance

For **Nickel Plated Brass Adaptors** see **Industrial Section 2**

STANDARD SERIES FRLS, 'SYNTESI'

The in-series regulator is used to take air at a set pressure from the ports on the front and back of the body, while the pneumatic inlet and outlet ports are connected directly.

It is possible to assemble several regulators side by side, all supplied at the same pressure, and obtain different regulated pressures, regardless of the pressure of the previous module.

The in-series regulator uses the same construction principles as the standard regulator, so the advantages are the same, such as compensation for upstream pressure changes, relief valve, rapid relief of the downstream pressure and a padlockable push-lock knob.

Technical Data	Body Size 1			Body Size 2			
Maximum Input Pressure bar	15			13			
Flow Rate Nl/min at 6.3 bar (0.63 MPa, 91 psi) ΔP 1 bar (0.1 MPa, 14 psi)	500			1000			
Weight g	193	188	179	546	519	515	503
Mounting Position	Any			Any			
Wall Fixing Screws	No. 2 M4 Screws			No. 2 M5 Screws			
Gauge Port	1/8" BSP			1/4" BSP			

1. Technopolymer adjusting knob
2. Technopolymer bell
3. Steel adjusting spring (with Geomet. treatment for anti-corrosion version)
4. Technopolymer flange
5. Rolling diaphragm
6. IN/OUT bushing made of OT58 nickel-plated brass or passivated aluminium for 3/4" - 1"
7. Technopolymer body
8. OT58 brass valve, with NBR vulcanized gasket
9. Stainless steel valve spring
10. Galvanised steel plate for knob locking (stainless steel for anti-corrosion version)
11. OT58 brass adjusting screw
12. Technopolymer ring nut
13. Technopolymer plate
14. Technopolymer rod
15. NBR o-ring gaskets
16. Technopolymer plug

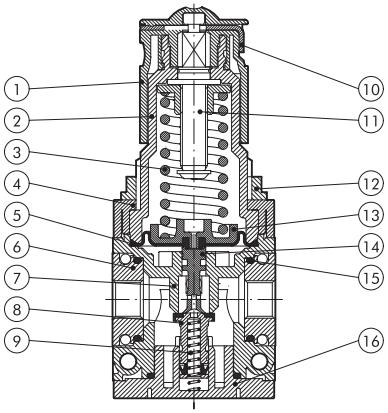

In-series Regulator, Body Size 1

Relieving, BSPP

9185	Thread BSPP	Pressure Range bar
5611R241	G1/8"	0 to 8
5611R261	G1/8"	0 to 12
5612R242	G1/4"	0 to 8
5612R262	G1/4"	0 to 12
5613R243	G3/8"	0 to 8
5613R263	G3/8"	0 to 12

In-series Regulator, Body Size 2

Relieving, BSPP

9185	Thread BSPP	Pressure Range bar
5623R243	G3/8"	0 to 8
5623R263	G3/8"	0 to 12
5624R244	G1/2"	0 to 8
5624R264	G1/2"	0 to 12
5625R245	G3/4"	0 to 8
5625R265	G3/4"	0 to 12
5626R246	G1"	0 to 8
5626R266	G1"	0 to 12

STANDARD SERIES FRLS, 'SYNTESI'

Technical Data	Body Size 1			Body Size 2			
Maximum Input Pressure bar	15			13			
Flow Rate Nl/min at 6.3 bar (0.63 MPa, 91 psi) ΔP 1 bar (0.1 MPa, 14 psi)	500	800	2200	3200	4300		5200
Weight g	244	239	230	623	596	592	580
Bowl Capacity cm3	30			70			
Mounting Position	Vertical			Vertical			
Wall Fixing Screws	No. 2 M4 Screws			No. 2 M5 Screws			
Gauge Port	1/8" BSP			1/4" BSP			

Standard Filter Regulator, Body Size 1

Relieving Manual Drain, BSPP

9185	Thread BSPP	Micron µm	Pressure Range bar
5611B241	G1/8"	20	0 to 8
5611B261	G1/8"	20	0 to 12
5612B242	G1/4"	20	0 to 8
5612B262	G1/4"	20	0 to 12
5613B243	G3/8"	20	0 to 8
5613B263	G3/8"	20	0 to 12

Standard Filter Regulator, Body Size 1

Relieving Auto Drain, BSPP

9185	Thread BSPP	Micron µm	Pressure Range bar
5611B541	G1/8"	20	0 to 8
5611B561	G1/8"	20	0 to 12
5612B542	G1/4"	20	0 to 8
5612B562	G1/4"	20	0 to 12
5613B543	G3/8"	20	0 to 8
5613B563	G3/8"	20	0 to 12

Standard Filter Regulator, Body Size 2

Relieving Manual Drain, BSPP

9185	Thread BSPP	Micron µm	Pressure Range bar
5623B243	G3/8"	20	0 to 8
5623B263	G3/8"	20	0 to 12
5624B244	G1/2"	20	0 to 8
5624B264	G1/2"	20	0 to 12
5625B245	G3/4"	20	0 to 8
5625B265	G3/4"	20	0 to 12
5626B246	G1"	20	0 to 8
5626B266	G1"	20	0 to 12

Standard Filter Regulator, Body Size 2

Relieving Auto Drain, BSPP

9185	Thread BSPP	Micron µm	Pressure Range bar
5623B543	G3/8"	20	0 to 8
5623B563	G3/8"	20	0 to 12
5624B544	G1/2"	20	0 to 8
5624B564	G1/2"	20	0 to 12
5625B545	G3/4"	20	0 to 8
5625B565	G3/4"	20	0 to 12
5626B546	G1"	20	0 to 8
5626B566	G1"	20	0 to 12

STANDARD SERIES FRLS, 'SYNTESI'

Technical Data	Body Size 1			Body Size 2			
Maximum Input Pressure bar	15			13			
Flow Rate Nl/min at 6.3 bar (0.63 MPa, 91 psi) ΔP 1 bar (0.1 MPa, 14 psi)	1300	1700	2200	2300	3900		3900
Weight g	185	180	171	480	453	449	437
Quantity of Fitted Oil cm3	60			130			
Mounting Position	Vertical			Vertical			
Wall Fixing Screws	No. 2 M4 Screws			No. 2 M5 Screws			

Standard Lubricator, Body Size 1

BSPP

9154	Thread BSPP
5611L101	G1/8"
5612L102	G1/4"
5613L103	G3/8"

Standard Lubricator, Body Size 2

BSPP

9185	Thread BSPP
5623L103	G3/8"
5624L104	G1/2"
5625L105	G3/4"
5626L106	G1"

STANDARD SERIES FRLS, 'SYNTESI'

Technical Data	Body Size 1			Body Size 2			
Maximum Input Pressure bar	15			13			
Flow Rate Nl/min at 6.3 bar (0.63 MPa, 91 psi) ΔP 0.5 bar (0.05 MPa, 7 psi)	800	1000	1100	2800	3000		3000
Weight g	197	192	183	476	449	445	433
Mounting Position	Any			Any			
Wall Fixing Screws	No. 2 M4 Screws			No. 2 M5 Screws			

Shut Off Valve, Body Size 1

Manual, BSPP

9185	Thread BSPP
5611V101	G1/8"
5612V102	G1/4"
5613V103	G3/8"

Shut Off Valve, Body Size 2

Manual, BSPP

9185	Thread BSPP
5623V103	G3/8"
5624V104	G1/2"
5625V105	G3/4"
5626V106	G1"

Shut Off Valve, Body Size 1

Pneumatic, BSPP

9185	Thread BSPP
5611V201	G1/8"
5612V202	G1/4"
5613V203	G3/8"

Shut Off Valve, Body Size 2

Pneumatic, BSPP

9185	Thread BSPP
5623V203	G3/8"
5624V204	G1/2"
5625V205	G3/4"
5626V206	G1"

Shut Off Valve, Body Size 1

Solenoid, BSPP

9185	Thread BSPP
5611V701	G1/8"
5612V702	G1/4"
5613V703	G3/8"

Shut Off Valve, Body Size 2

Solenoid, BSPP

9185	Thread BSPP
5623V703	G3/8"
5624V704	G1/2"
5625V705	G3/4"
5626V706	G1"

STANDARD SERIES FRLS, 'SYNTESI'

Technical Data	Body Size 1			Body Size 2			
Input Pressure Range bar	3 to 10			3 to 10			
Flow Rate Nl/min at 6.3 bar (0.63 MPa, 91 psi) ΔP 0.5 bar (0.05 MPa, 7 psi)	900	1000	1100	2800	3600		3600
Weight g	203	198	189	503	476	472	460
Mounting Position	Any			Any			
Wall Fixing Screws	No. 2 M4 Screws			No. 2 M5 Screws			

Progressive Starter, Body Size 1

BSPP

9185	Thread BSPP
5611A701	G1/8"
5612A702	G1/4"
5613A703	G3/8"

Progressive Starter, Body Size 2

BSPP

9185	Thread BSPP
5623A703	G3/8"
5624A704	G1/2"
5625A705	G3/4"
5626A706	G1"

Technical Data	Body Size 1	Body Size 2
Maximum Pressure bar	15	13
Maximum Current A	2	2
Maximum Voltage V	250	250
Cable OD mm	4.9	4.9
Fluid	Filtered lubricated or non-lubricated compressed air Lubrication, if used, must be continuous	
Mounting Position	Any	Any
Wall Fixing Screws	No. 2 M4 Screws	No. 2 M5 Screws

Pressure Switch, Body Size 1

M8 Connector, BSPP

9185	Thread BSPP
5611S201	G1/8"
5612S202	G1/4"
5613S203	G3/8"

Security Knob

NOTE: pull outwards to remove the knob from the pressure switch on the unit. Insert the security knob and regulate the pressure switch. Then press the handle firmly to lock it in position. If the pressure switch needs to be reset, remove the security knob by forcing it laterally with a screwdriver.

To Suit 9000401 & 9000402

9149
9200703

Pressure Switch, Body Size 2

M8 Connector, BSPP

9185	Thread BSPP
5623S203	G3/8"
5624S204	G1/2"
5625S205	G3/4"
5626S206	G1"

STANDARD SERIES FRLS, 'SYNTESI'

Technical Data	Body Size 1			Body Size 2			
Input Pressure bar	15			13			
Flow Rate Nl/min at 6.3 bar (0.63 MPa, 91 psi) ΔP 0.5 bar (0.05 MPa, 7 psi)	350			1200			
Weight g	414	409	400	1074	1074	1043	1031
Mounting Position	Vertical			Vertical			
Wall Fixing Screws	No. 2 M4 Screws			No. 2 M5 Screws			
Gauge Port	1/8" BSP			1/4" BSP			

Filter Regulator + Lubricator Set, Body Size 1

Manual Drain, BSPP

9185	Thread BSPP	Micron µm	Pressure Range bar
5611B24L101	G1/8"	20	0 to 8
5612B24L102	G1/4"	20	0 to 8
5613B24L103	G3/8"	20	0 to 8

Filter Regulator + Lubricator Set, Body Size 2

Manual Drain, BSPP

9185	Thread BSPP	Micron µm	Pressure Range bar
5623B24L103	G3/8"	20	0 to 8
5624B24L104	G1/2"	20	0 to 8
5625B24L105	G3/4"	20	0 to 8
5626B24L106	G1"	20	0 to 8

Filter Regulator + Lubricator Set, Body Size 1

Auto Drain, BSPP

9185	Thread BSPP	Micron µm	Pressure Range bar
5611B54L101	G1/8"	20	0 to 8
5612B54L102	G1/4"	20	0 to 8
5613B54L103	G3/8"	20	0 to 8

Filter Regulator + Lubricator Set, Body Size 2

Auto Drain, BSPP

9185	Thread BSPP	Micron µm	Pressure Range bar
5623B54L103	G3/8"	20	0 to 8
5624B54L104	G1/2"	20	0 to 8
5625B54L105	G3/4"	20	0 to 8
5626B54L106	G1"	20	0 to 8

For **Metal Work Valves**
see pages **86-106**

ACCESSORIES, 'SYNTESI'

Connecting Nipple Kit

Body Size 1

9185
9210000

Connecting Nipple Kit

Body Size 2

9185
9210010

Threaded Port Kit

Body Size 1

9185	Thread BSPP
9210001	G1/8"
9210002	G1/4"
9210003	G3/8"

Threaded Port Kit

Body Size 2

9185	Thread BSPP
9210011	G3/8"
9210012	G1/2"
9210013	G3/4"
9210014	G1"

Automatic Drain

To Suit Body Sizes 1 & 2

9185
9000802

Replacement Elements

Spare, Body Size 1

9185	Micron µm
9210150	5
9210151	20

Replacement Elements

Spare, Body Size 2

9185	Micron µm
9210155	5
9210156	20

Replacement Elements

Oil Removal, Body Size 1

9185
9210160

Replacement Elements

Oil Removal, Body Size 2

9185
9210165

Replacement Elements

Active Carbon, Body Size 1

9185
9210161

Replacement Elements

Active Carbon, Body Size 2

9185
9210166

Mountings

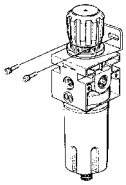

Bracket for Regulators

9154	To Suit Sizes
9200701	Body size 1
9400701	Body size 2

Square Dial Pressure Gauge

- A compact pressure gauge with a square dial suitable for air treatment units.
- Suitable for use with Metal Work Bit, Syntesi, New Deal and Skillair ranges.
- A PTFE ring seal mounted on the 1/8" thread of the fiting ensures a perfect pneumatic seal.
- To mount it, screw the gauge in as far as it will go, then loosen enough to align the dial. A sealant is not required.
- The pressure gauge has a neck to dampen pressure vibration and absorb water hammer. This improves overall reliability and guarantees longer life.

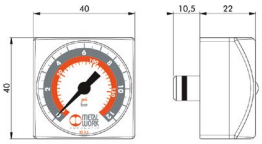

G1/8" Thread

9154	Pressure Range (bar)
9700109	0 to 4
9700110	0 to 12

STANDARD SERIES FRLS, 'NEW DEAL'

Standard Filter

Technical Specifications
- Fluid: compressed air
- Mounting position: vertical
- Condensate drain: manual/semi-auto

Maximum Temperature at 10 bar: +50°C

Maximum Inlet Pressure: 18 bar

Dimensions

Thread BSP	A	B	C	D	E	G	H	L (Hole)	M	kg
G1/4"	42	142	42	42	32	10	21	M4	185	0.4
G3/8"	60	180	60	60	46	14	30	M4	230	0.9
G1/2"	60	180	60	60	46	14	30	M4	230	0.9
G3/4"	80	235	80	80	66	22	40	M6	325	1.9
G1"	80	235	80	80	66	22	40	M6	325	1.9

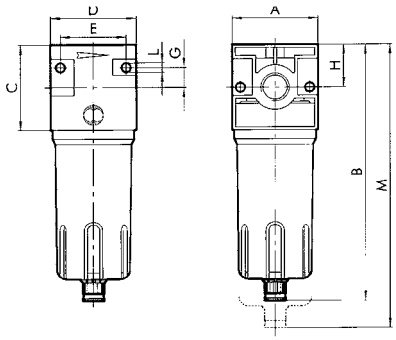

Manual/Semi-auto, BSPP

9154	Thread BSPP	Micron µm
1221006	G1/4"	20
1321006	G3/8"	20
1421006	G1/2"	20
1521006	G3/4"	20
1621006	G1"	20

Oil Removal Filter

Technical Specifications
- Degree of filtration: 99.97% 0.01µm
- Flow rate at 6 bar ΔP 1 bar: 1600 Nl/min
- Fluid: filtered 4µm compressed air
- Weight: 0.9kg
- Mounting position: vertical
- Bowl capacity: 45cm³

NB: It is advisable to mount a 4µ filter upstream acting as a rough filter.

Maximum Temperature at 10 bar: +50°C

Maximum Inlet Pressure: 18 bar

Dimensions

Thread BSP	A	B	C	D	E	G	H	L (Hole)	M
G1/2"	60	180	60	60	46	14	30	M4	230

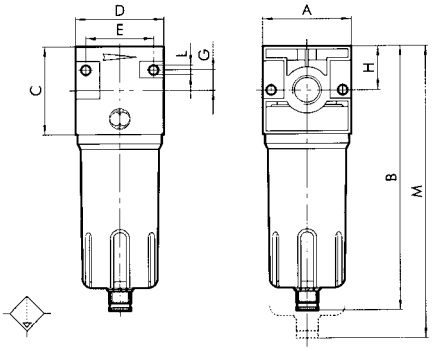

BSPP

9154	Thread BSPP
1422002	G1/2"

STANDARD SERIES FRLS, 'NEW DEAL'

Technical Specifications

• Fluid: filtered, lubricated or non-lubricated compressed air*

*Lubrication, if used, must be continuous.

Maximum Temperature at 10 bar:
+50°C

Maximum Inlet Pressure:
18 bar

Dimensions

Thread BSP	A	B	C	D	E	F	G	H	I	L (Hole)	M	N	kg
G1/4"	42	142	42	42	32	30 x 1.5	10	21	25	M4	185	G1/8"	0.3
G3/8"	60	180	60	60	46	38 x 2	14	30	35	M4	230	G1/8"	0.8
G1/2"	60	180	60	60	46	38 x 2	14	30	35	M4	230	G1/8"	0.8
G3/4"	80	235	80	80	66	55 x 2	22	40	47	M6	325	G1/4"	2.2
G1"	80	235	80	80	66	55 x 2	22	40	47	M6	325	G1/4"	2.2

Pressure Regulator

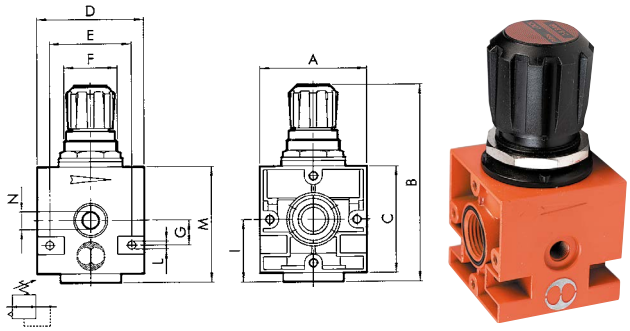

BSPP

9154	Thread BSPP	Pressure Range bar
1202002	G1/4"	0 to 8
1202003	G1/4"	0 to 12
1302002	G3/8"	0 to 8
1302003	G3/8"	0 to 12
1402002	G1/2"	0 to 8
1402003	G1/2"	0 to 12
1502003	G3/4"	0 to 12
1602003	G1"	0 to 12

Pressure Regulator, Padlockable

BSPP

9154	Thread BSPP	Pressure Range bar
1210013	G1/4"	0 to 8
1210014	G1/4"	0 to 12
1310013	G3/8"	0 to 8
1310014	G3/8"	0 to 12
1410013	G1/2"	0 to 8
1410014	G1/2"	0 to 12

STANDARD SERIES FRLS, 'NEW DEAL'

Filter Regulator

Technical Specifications

- Mounting position: vertical

NB: the regulator pressure must always be set upwards.

Maximum Temperature at 10 bar:
+50°C

Maximum Inlet Pressure:
18 bar

Dimensions

Thread BSP	A	B	C	D	E	F	G	I	L (Hole)	M	N	P	kg
G1/4"	42	190	42	42	36	30 x 1.5	10	121	M4	145	G1/8"	233	0.5
G3/8"	60	245	60	60	52	30 x 1.5	14	150	M4	185	G1/8"	295	1
G1/2"	60	245	60	60	52	30 x 1.5	14	150	M4	185	G1/8"	295	1

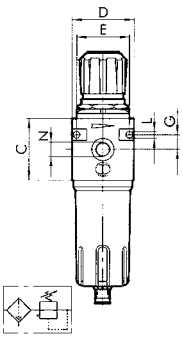

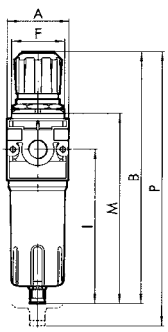

BSPP

9185	Thread BSPP	Micron µm	Pressure Range bar
1225030	G1/4"	20	0 to 8
1225054	G1/4"	20	0 to 12
1325030	G3/8"	20	0 to 8
1325054	G3/8"	20	0 to 12
1425030	G1/2"	20	0 to 8
1425054	G1/2"	20	0 to 12

Lubricator

Technical Specifications

- Fluid: filtered compressed air
- Mounting position: vertical

Maximum Temperature at 10 bar:
+50°C

Maximum Inlet Pressure:
18 bar

Notes

- Use the screw provided to set the drip rate to drop every 300-600ml.
- Fit the lubricator as close as possible to the point of use
- Fill the bowl with oil before pressurising the system
- Do not use cleaning oil, brake fluid or solvents in general
- Recommended lubricants: ISO and UNI FD22, e.g. Energol HLP 22(BP), Spinesso 22 (Esso), Mobil, Tellus Oil 22 (Shell)
- Automatic filling lubricator and minimum level lubricator

Dimensions

Thread BSP	A	B	C	D	E	G	I	L (Hole)	M	kg
G1/4"	42	156	42	42	32	10	121	M4	176	0.4
G3/8"	60	195	60	60	46	14	136	M4	220	0.9
G1/2"	80	195	80	80	66	22	182	M4	290	0.9
G3/4"	80	260	80	80	66	22	182	M6	290	1.8
G1"	80	260	80	80	66	22	182	M6	290	1.8

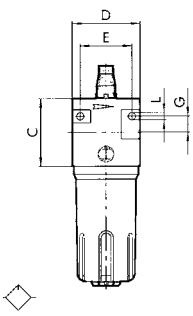

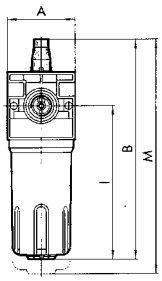

BSPP

9154	Thread BSPP
1223001	G1/4"
1323001	G3/8"
1423001	G1/2"
1523001	G3/4"
1623001	G1"

STANDARD SERIES FRLS, 'NEW DEAL'

Filter + Regulator + Lubricator Set

Technical Specifications
- Fluid: compressed air

Maximum Temperature at 10 bar:
+50°C

Maximum Inlet Pressure:
18 bar

Notes
- Highly reliable, heavy duty, piston operated
- FRL unit
- Stability of the set pressure as the upstream pressure varies
- Metal bowl with external sight glass
- Semi-automatic and automatic condensate drain
- Lubrication proportional to flow rate
- Micrometric lubrication regulation
- Activation guaranteed with low flow rates

Dimensions

Thread BSPP	A	B	D	E	G	L (Hole)	kg
G1/4"	42	190	126	116	20	M4	1
G3/8"	60	245	180	166	28	M4	2.5
G1/2"	60	245	180	166	28	M4	2.5
G3/4"	80	332	240	226	44	M6	5.8
G1"	80	332	240	226	44	M6	5.8

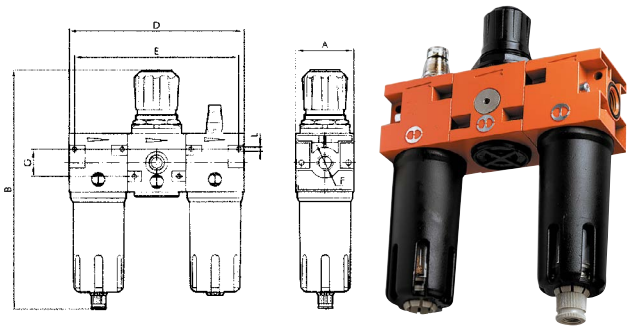

BSPP

9185	Thread BSPP	Micronmμm	Pressure Range bar
1224030	G1/4"	20	0 to 8
1224054	G1/4"	20	0 to 12
1324030	G3/8"	20	0 to 8
1324054	G3/8"	20	0 to 12
1424030	G1/2"	20	0 to 8
1424054	G1/2"	20	0 to 12
1524030	G3/4"	20	0 to 12
1624030	G1"	20	0 to 12

Filter Regulator + Lubricator Sets

Technical Specifications
- Fluid: compressed air

Maximum Temperature at 10 bar:
+50°C

Maximum Inlet Pressure:
18 bar

Dimensions

Thread BSPP	A	B	D	E	G	L (Hole)	kg
G1/4"	42	190	84	76	10	M4	0.9
G3/8"	60	240	120	109	14	M4	2
G1/2"	60	240	120	109	14	M6	2

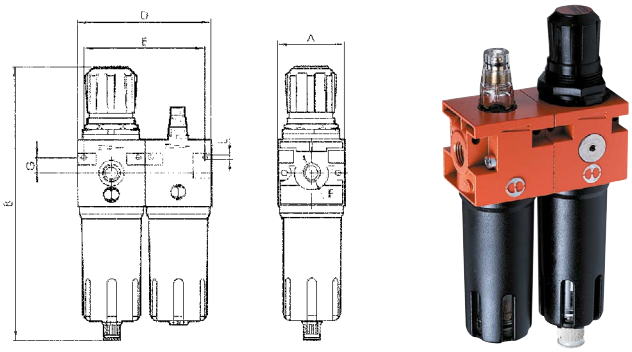

BSPP

9185	Thread BSPP	Micronμm	Pressure Range bar
1226030	G1/4"	20	0 to 8
1226054	G1/4"	20	0 to 12
1326030	G3/8"	20	0 to 8
1326054	G3/8"	20	0 to 12
1426030	G1/2"	20	0 to 8
1426054	G1/2"	20	0 to 12

STANDARD SERIES FRLS, 'NEW DEAL' ACCESSORIES

Shut Off Valve

Technical Specifications

- Fluid: filtered, lubricated or non-lubricated compressed air*

* Lubrication, if used, must be continuous.

Maximum Temperature at 10 bar:
+50°C

Inlet Pressure:
18 bar

Dimensions

Thread BSPP	A	B	C	D	E	F	G	I	L (Hole)	kg
G1/4"	42	105	42	42	32	10	42	32	M4	0.35
G3/8"	60	126	60	60	46	14	60	43	M4	0.8
G1/2"	60	126	60	60	46	14	60	43	M4	0.8

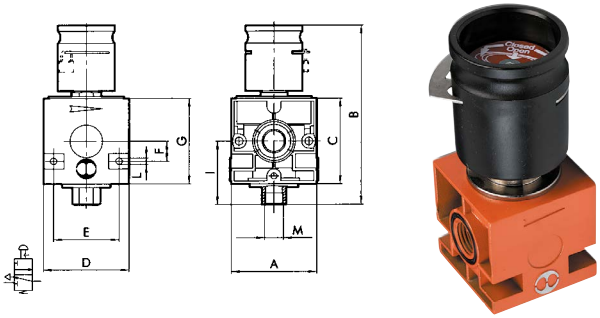

Lockable

9154	Thread BSPP
1270001	G1/4"
1370001	G3/8"
1470001	G1/2"

Distribution Block

Technical Specifications

Maximum Working Temperature at 10 bar:
+50°C

Maximum admissible Pressure:
18 bar

Dimensions

Thread BSPP	A	B	C	D	E	F	G	H (No2 pos)	L (Hole)
G1/4"	42	42	15	34	34	8.5	8.5	21	M4
G3/8"	60	60	20	49	49	14	14	30	M4
G1/2"	60	60	20	49	49	14	14	30	M4
G3/4"	80	80	30	64	64	16	16	40	M6
G1"	80	80	30	64	64	16	16	40	M6

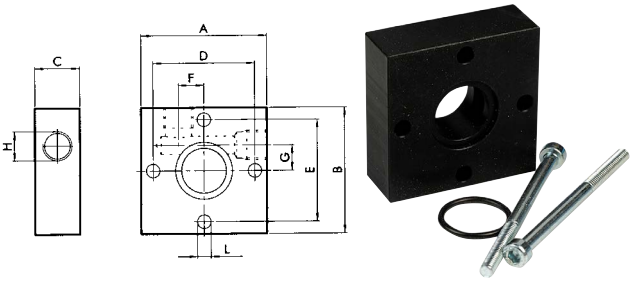

BSPP

9154	To Suit
9200401	G1/8" for G1/4
9400401	G1/4" for G3/8 to G1/2
9600401	G1/2" for G3/4 to G1

Drip Leg Drain

Technical Specifications

- Threaded port: G1/2"
- Wall fixing screws: M6 x 75

System supply condensate drain:

- All-round condensate level viewing
- Automatic drain from inside the bowl
- Axial coupling

Maximum Working Temperature at 10 bar:
+50°C

Maximum admissible Pressure:
18 bar

BSPP

9154	Thread BSPP
4589003	G1/2"

STANDARD SERIES FRLS, 'NEW DEAL' ACCESSORIES

Mountings

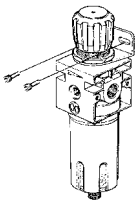

Bracket for Regulators

9154	To Suit Sizes
9200701	G1/4"
9400701	G3/8" to G1/2"

Mountings

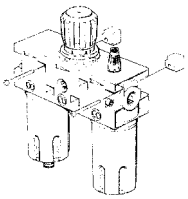

Spacers for Wall Mount FRLs

9154	To Suit Sizes
9200601	G1/4"
9400601	G3/8" to G1/2"
9600601	G3/4"

Filter Element

Spare

9154	To Suit Sizes	Micron µm
9250103	G1/4"	4
9250102	G1/4"	20
9450103	G3/8" to G1/2"	4
9450102	G3/8" to G1/2"	20
9650103	G3/4" to G1"	4
9650102	G3/4" to G1"	20
9450105	G3/8" to G1/2"	0.01

Shut Off Valve Adaptor

Brass

9154	To Suit Sizes
9201001	G1/4"
9401001	G3/8"
9401002	G1/2"

Automatic Drains

Fully Automatic

9154	To Suit Sizes
9000802	G3/8" to G1"

Automatic Drains

Semi-automatic

9154	To Suit Sizes
9000803	G1/4" to G1/2"

Automatic Drains

Metal Bowl for use with Semi-auto & Auto Drains

9154	To Suit Sizes
9255201	G1/4"
9455201	G3/8" to G1/2"

Square Dial Pressure Gauge

- A compact pressure gauge with a square dial suitable for air treatment units.
- Suitable for use with Metal Work Bit, Syntesi, New Deal and Skillair ranges.
- A PTFE ring seal mounted on the 1/8" thread of the fitting ensures a perfect pneumatic seal.
- To mount it, screw the gauge in as far as it will go, the loosen enough to align the dial. A sealant is not required.
- The pressure gauge has a neck to dampen pressure vibration and absorb water hammer. This improves overall reliability and guarantees longer life.

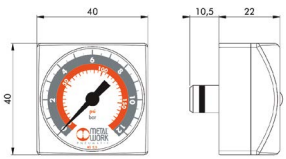

G1/8" Thread

9154	Pressure Range (bar)
9700109	0 to 4
9700110	0 to 12

STANDARD SERIES FRLS, 'NEW DEAL' BREATHE AIR SET

Breathe Air Set

Breathe provides high quality, clean air, essential for paint spraying and breathing air applications. Designed for self-contained operations, it will filter compressed air directly from most types of compressor and ring main systems.

Breathe will supply sufficient breathable air for up to two men on constant demand and will provide breathing quality air to a higher standard than specified in BS4275: 1974.

Technical Specifications

- Element grade: XA and AC
- Threaded port: 1/2" BSP
- Particle removal: 0.01 microns
- Maximum oil carry over @ +20°C: 0.005 mg/cu m
- Pressure loss, clean and dry: 150 mbar
- Pressure loss, saturated: 350 mbar
- Pressure loss, change element: 400 mbar

Maximum Recommended Temperature:
+25°C

Maximum Working Pressure:
16 bar

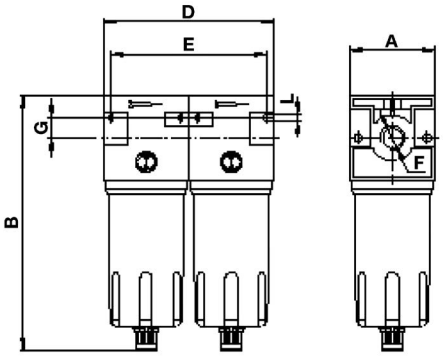

Dimensions

A	60mm	**E**	121mm
B	180mm	**G**	14mm
D	135mm	**L**	4mm Hole

BSP

9154	Element Grade	Thread Size BSP	Micron µm	Pressure Range Bar
Z29100BREATHE	XA & SC	1/2"	0.01	0 to 16

For **Nylon & Polyethylene Tubing** see **Industrial Section 6**

FRLS, 'SKILLAIR'

Filter, 200 Series

Technical Specifications
- Degree of filtration: 20µm
- Flow rate at 6.3 bar: 2400 Nl/min
- Fluid: compressed air
- Weight: 0.7kg

Maximum Temperature at 10 bar:
+50°C

Maximum Input Pressure:
13 bar

BSPP

9193	Thread BSPP
3480002	G1/4"
3580002	G3/8"
3680002	G1/2"

Filter, 400 Series

Technical Specifications
- Degree of filtration: 20µm
- Flow rate at 6.3 bar: 16500 (G11/2") Nl/min, 20000 (G2") Nl/min
- Fluid: compressed air
- Weight: 1.4kg

Maximum Temperature at 10 bar:
+50°C

Maximum Input Pressure:
13 bar

BSPP

9193	Thread BSPP
6380002	G1.1/2"
6480002	G2"

Filter, 300 Series

Technical Specifications
- Degree of filtration: 20µm
- Flow rate at 6.3 bar: 3800 Nl/min
- ΔP 0.5 bar (0.005 MPa, 7 psi): 135 scfm
- Fluid: compressed air
- Weight: 1.4 kg

Maximum Temperature at 10 bar:
+50°C

Maximum Input Pressure:
13 bar

BSPP

9193	Thread BSPP
4480002	G1/2"
4580002	G3/4"
4680002	G1"

Regulator, 200 Series

Technical Specifications
- Setting range: 0 to 8 bar
- Flow rate at 6.3 bar: 25000 Nl/min
- Weight: 0.7kg
- Mounting: any position
- Pressure gauge port: G1/8"

Maximum Temperature at 10 bar:
+50°C

Maximum Input Pressure:
13 bar

BSPP

9193	Thread BSPP
3402003	G1/4"
3502003	G3/8"
3602003	G1/2"

FRLS, 'SKILLAIR'

Regulator, 300 Series

Technical Specifications
- Setting range: 0 to 8 bar
- Flow rate at 6.3 bar: 35000 Nl/min
- Weight: 1.4kg

Maximum Temperature at 10 bar:
+50°C

Maximum Input Pressure:
13 bar

BSPP

9193	Thread BSPP
4402002	G1/2"
4502002	G3/4"
4602002	G1"

Regulator, 400 Series

Technical Specifications
- Setting range: dependent on pilot operating regulator
- Flow rate at 6.3 bar:
  18000 (G1.1/2") Nl/min, 20000 (G2") Nl/min
- Weight: 4.8kg (G1.1/2"), 5.6kg (G2")
- Mounting: any position
- Pressure gauge port: G1/4"
- Requires pilot regulator

Maximum Temperature at 10 bar:
+50°C

Maximum Input Pressure:
13 bar

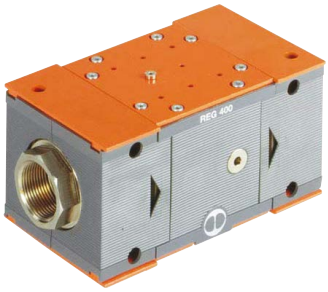

BSPP

9193	Thread BSPP
6302001	G1.1/2'
6402001	G2"

Pilot Regulator, 400 Series

Technical Specifications
- Flow rate at 6.3 bar ΔP 0.5 bar: 120 Nl/min
- Weight: 0.6kg
- Pressure gauge port: G1/8"

Maximum Temperature at 10 bar:
+50°C

Maximum Input Pressure:
13 bar

BSPP

9193	Thread BSPP	Pressure Range bar
3206001	G1/4"	2
3206002	G1/4"	4
3206003	G1/4"	8
3206004	G1/4"	12

Filter Regulator, 200 Series

Technical Specifications
- Setting range: 0 to 8 bar
- Degree of filtration: 20µm
- Flow rate at 6.3 bar ΔP 0.5 bar: 1600 Nl/min
- Weight: 1kg
- Pressure gauge port: G1/8"

Maximum Temperature:
+50°C

Maximum Input Pressure:
13 bar

BSPP

9193	Thread BSPP
3483008	G1/4"
3583008	G3/8"
3683008	G1/2"

FRLS, 'SKILLAIR'

Filter Regulator, 300 Series

Technical Specifications
- Setting range: 0 to 8 bar
- Degree of filtration: 20µm
- Flow rate at 6.3 bar: 3500 Nl/min
- ΔP 0.5 bar: 57 scfm
- Weight: 1.8kg
- Pressure gauge port: G1/8"

Maximum Temperature:
+50°C

Maximum Input Pressure:
13 bar

BSPP

9193	Thread BSPP
4483005	G1/2"
4583005	G3/4"
4683005	G1"

Lubricator, 300 Series

Technical Specifications
- Bowl capacity: 160
- Flow rate at 6.3 bar: 3500 Nl/min
- Weight: 1.4kg

Maximum Temperature:
+50°C

Maximum Input Pressure:
13 bar

BSPP

9193	Thread BSPP
4481001	G1/2"
4581001	G3/4"
4681001	G1"

Lubricator, 200 Series

Technical Specifications
- Bowl capacity: 95
- Flow rate at 6.3 bar: 2200 Nl/min
- Weight: 0.7kg

Maximum Temperature:
+50°C

Maximum Input Pressure:
13 bar

BSPP

9193	Thread BSPP
3481001	G1/4"
3581001	G3/8"
3681001	G1/2"

Lubricator, 400 Series

Technical Specifications
- Type of lubrication: mist
- Bowl capacity: 800
- Flow rate at 6.3 bar:
  18.000 (G1.1/2") Nl/min, 21.000 (G2") Nl/min
- Weight: 4.9kg (G1.1/2"), 5.7kg (G2")

Maximum Temperature:
+50°C

Maximum Input Pressure:
13 bar

BSPP

9193	Thread BSPP
6381001	G1.1/2"
6481001	G2"

FRLS, 'SKILLAIR'

Manual Shut Off Valve, 200 Series

Technical Specifications
- Flow rate at 6.3 bar: 24000 Nl/min
- Weight: 0.8kg

Maximum Temperature at 1 MPa, 10 bar (145 psi):
+50°C

Maximum Inlet Pressure (solenoid version:
3 bar
Maximum Inlet Pressure:
13 bar

BSPP

9193	Thread BSPP
3470001	G1/4"
3570001	G3/8"
3670001	G1/2"

Filter + Regulator + Lubricator, 200 Series

Technical Specifications
- Setting range: 0 to 8 bar
- Degree of filtration: 20µm
- Flow rate at 6.3 bar: 1300 Nl/min
- Weight: 1.5kg

Maximum Temperature:
+50°C

Maximum Inlet Pressure:
13 bar

BSPP

9193	Thread BSPP
3482008	G1/4"
3582008	G3/8"
3682008	G1/2"

Manual Shut Off Valve, 300 Series

Technical Specifications
- Flow rate at 6.3 bar: 32000 Nl/min
- Weight: 1.2kg

Maximum Temperature at 1 MPa, 10 bar (145 psi):
+50°C

Maximum Inlet Pressure (solenoid version:
2 bar
Maximum Inlet Pressure:
13 bar

BSPP

9193	Thread BSPP
4470001	G1/2"
4570001	G3/4"
4670001	G1"

Filter + Regulator + Lubricator, 300 Series

Technical Specifications
- Setting range: 0 to 8 bar
- Degree of filtration: 20µm
- Flow rate at 6.3 bar: 2500 Nl/min
- Weight: 2.9kg

Maximum Temperature:
+50°C

Maximum Inlet Pressure:
13 bar

BSPP

9193	Thread BSPP
4482005	G1/2"
4582005	G3/4"
4682005	G1"

FRLS, 'SKILLAIR'

Filter Regulator + Lubricator, 200 Series

Technical Specifications
- Setting range: 0 to 8 bar
- Degree of filtration: 20µm
- Flow rate at 6.3 bar: 1200 Nl/min
- Weight: 1.35kg

Maximum Temperature: +50°C

Maximum Inlet Pressure: 13 bar

BSPP

9193	Thread BSPP
3484008	G1/4"
3584008	G3/8"
3684008	G1/2"

Filter Regulator + Lubricator, 300 Series

Technical Specifications
- Setting range: 0 to 8 bar
- Degree of filtration: 20µm
- Flow rate at 6.3 bar: 2300 Nl/min
- Weight: 2.7kg

Maximum Temperature: +50°C

Maximum Inlet Pressure: 13 bar

BSPP

9193	Thread BSPP
4484005	G1/2"
4584005	G3/4"
4684005	G1"

Solenoid Coil, 200 Series

Form B/Industrial, 22mm Coil

9182	Voltage
W0215000101	24V DC 2W
W0215000111	24V AC
W0215000121	110V AC
W0215000131	230V AC

M1NS2000: Socket Connector, Form B, see section 09 for pricing.

Solenoid Coil, 300 Series

Form B/Industrial, 30mm Coil

9182	Voltage
W0210010100	24V DC 2W
W0210011100	24V AC
W0210012100	110V AC
W0210013100	230V AC

G1NU2000: Socket Connector, Form A, see section 09 for pricing.

Mounting Bracket

To Suit 200 & 300 Series

9154	To Suit Series
9400701	200
9400702	300

FRLS, 'ONE' AIR TREATMENT UNIT

'ONE' Integrated Compressed Air Treatment Unit

In the world of pneumatics, which is considered mature, it is rare to encounter completely new and different products.

ONE is a compressed air treatment unit with a high degree of integration, that encompassed numerous pneumatic functions.
In fact, it contains so many innovations that a single patent is not enough to safeguard it against imitation – three separate patent applications have been registered with a total of 39 claims.
This unit is so innovative that it won the international novelty award at Fluidtrons Compomac.

ONE has a single high-performance valve on the main row that handles all the functions from regulation to relief. It is controlled by
a high-precision pilot regulator with controlled relief, in series with the manual on-off valve, the electric valve and the progressive actuator. Unification of the valve has led to a significant reduction in overall dimensions, enhanced capacity, precision and response speed.

The **ONE** single unit houses the threaded ports, filter, condensate drain, pressure regulator, shut-off valve, soft start valve, pressure switch and three supplementary air intakes.

The single unit houses the threaded ports, filter, condensate drain, pressure regulator, shut-off valve, soft start valve, pressure switch and three supplementary air intakes.

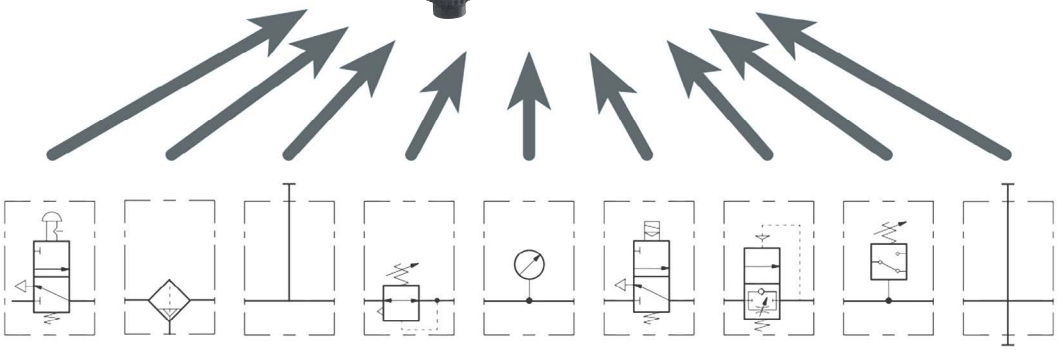

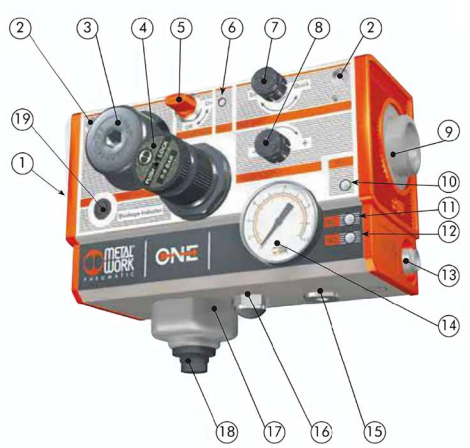

1. Air intake, with swivel threaded port
2. Fixing hole
3. Access to filter cartridge
4. Pressure regulation
5. Manual override (shut-off valve, electrical)
6. Soft start valve regulation
7. Switching pressure regulation
8. Air outlet with swivel threaded port
9. LED signalling unit, ON
10. LED signalling pressure below the value set on pressure switch
11. LED signalling pressure over the value set on pressure switch
12. 5-pin M12x1 electrical connector
13. Pressure gauge
14. 1/4" air intake; another regulated air intake and a filtered non-regulated air intake are situated on the top
15. Air exhaust with a G1/4" silencer
16. Condensate tank
17. Condensate drain
18. Clogged filter signal

Other versions and further technical information available on request

9193	Version	Air Inlet/Outlet BSPP	Micron µm	Clogged Filter Signal	Condensate Drain	Pressure Range Bar	Valves	Pressure Switch
543211881300	Electric*	1/2"	20	Yes	Automatic	0.5 to 8	Padlock and APR	Yes